Panasonic

SERVICE MANUAL

3-WAY SYSTEM

R410A

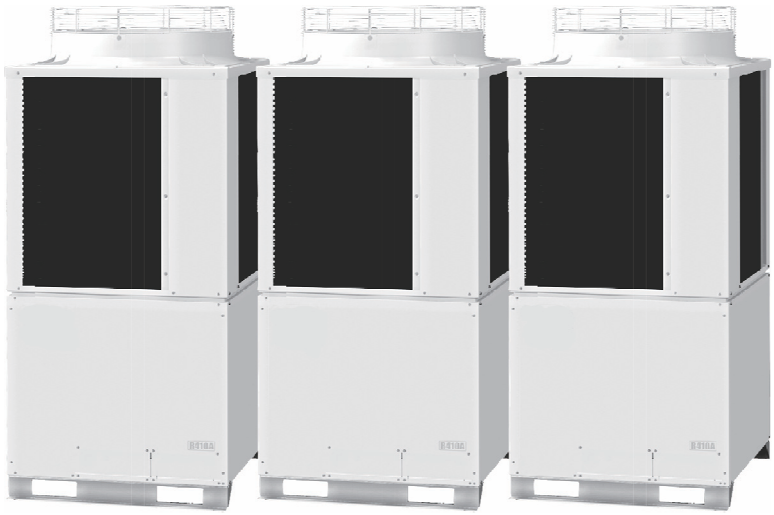

Model No.
Outdoor Unit

	Class	8HP	10HP	12HP	14HP	16HP
MF1	Model Name	U-8MF1E8	U-10MF1E8	U-12MF1E8	U-14MF1E8	U-16MF1E8

Indoor Unit

	Class	22	28	36	45	56	73	90	106	140	160
U1	4-Way Cassette	S-22MU1E5	S-28MU1E5	S-36MU1E5	S-45MU1E5	S-56MU1E5	S-73MU1E5		S-106MU1E5	S-140MU1E5	S-160MU1E5
Y1	4-Way Cassette 60×60	S-22MY1E5	S-28MY1E5	S-36MY1E5	S-45MY1E5	S-56MY1E5					
L1	2-Way Cassette	S-22ML1E5	S-28ML1E5	S-36ML1E5	S-45ML1E5	S-56ML1E5	S-73ML1E5				
D1	1-Way Cassette		S-28MD1E5	S-36MD1E5	S-45MD1E5	S-56MD1E5	S-73MD1E5				
F1	Low Silhouette Ducted	S-22MF1E5	S-28MF1E5	S-36MF1E5	S-45MF1E5	S-56MF1E5	S-73MF1E5	S-90MF1E5	S-106MF1E5	S-140MF1E5	S-160MF1E5
M1	Slim Low Static Ducted	S-22MM1E5	S-28MM1E5	S-36MM1E5	S-45MM1E5	S-56MM1E5					
T1	Ceiling			S-36MT1E5	S-45MT1E5	S-56MT1E5	S-73MT1E5		S-106MT1E5	S-140MT1E5	
K1	Wall Mounted	S-22MK1E5	S-28MK1E5	S-36MK1E5	S-45MK1E5	S-56MK1E5	S-73MK1E5		S-106MK1E5		
R1	Concealed Floor Standing	S-22MR1E5	S-28MR1E5	S-36MR1E5	S-45MR1E5	S-56MR1E5	S-71MR1E5				
P1	Floor Standing	S-22MP1E5	S-28MP1E5	S-36MP1E5	S-45MP1E5	S-56MP1E5	S-71MP1E5				

	Class	73	106	140	224	280
E1	High Static Pressure Ducted	S-73ME1E5	S-106ME1E5	S-140ME1E5	S-224ME1E5	S-280ME1E5

85464849288000

REFERENCE NO. **SM830188-00**

IMPORTANT!
Please Read Before Starting

This air conditioning system meets strict safety and operating standards. As the installer or service person, it is an important part of your job to install or service the system so it operates safely and efficiently.

For safe installation and trouble-free operation, you must:

- Carefully read this instruction booklet before beginning.
- Follow each installation or repair step exactly as shown.
- Observe all local, state, and national electrical codes.
- This equipment complies with EN/IEC 61000-3-12 provided that the short-circuit power Ssc is greater than or equals to the values corresponding to each model as shown in the table below at the interface point between the user's supply and the public system.
  It is the responsibility of the installer or user of the equipment to ensure; by consultation with the distribution network operator if necessary that the equipment is connected only to supply with a short-circuit power Ssc greater than or equals to the values corresponding to each model as shown in the table below.

	U-8MF1E8	U-10MF1E8	U-12MF1E8	U-14MF1E8	U-16MF1E8
Ssc	3840kW	4710kW	5340kW	3580kW	2870kW

- This equipment complies with EN/IEC 61000-3-11 provided that the system impedance Zmax is less than or equal to the values corresponding to each model as shown in the table below at the interface point between the user's supply and the public system. Consult with the supply authority for the system impedance Zmax.

	U-8MF1E8	U-10MF1E8	U-12MF1E8	U-14MF1E8	U-16MF1E8
Zmax	0.079Ω	0.079Ω	0.079Ω	0.079Ω	0.079Ω

- Pay close attention to all warning and caution notices given in this manual.

WARNING This symbol refers to a hazard or unsafe practice which can result in severe personal injury or death.

CAUTION This symbol refers to a hazard or unsafe practice which can result in personal injury or product or property damage.

If Necessary, Get Help

These instructions are all you need for most installation sites and maintenance conditions. If you require help for a special problem, contact our sales/service outlet or your certified dealer for additional instructions.

In Case of Improper Installation

The manufacturer shall in no way be responsible for improper installation or maintenance service, including failure to follow the instructions in this document.

SPECIAL PRECAUTIONS

WARNING When Wiring

ELECTRICAL SHOCK CAN CAUSE SEVERE PERSONAL INJURY OR DEATH. ONLY A QUALIFIED, EXPERIENCED ELECTRICIAN SHOULD ATTEMPT TO WIRE THIS SYSTEM.

- Do not supply power to the unit until all wiring and tubing are completed or reconnected and checked.
- Highly dangerous electrical voltages are used in this system. Carefully refer to the wiring diagram and these instructions when wiring. Improper connections and inadequate grounding can cause **accidental injury or death.**
- **Ground the unit** following local electrical codes.
- Connect all wiring tightly. Loose wiring may cause overheating at connection points and a possible fire hazard.
- Provide a power outlet to be used exclusively for each unit, and a power supply disconnect, circuit breaker and earth leakage breaker for overcurrent protection should be provided in the exclusive line.
- Provide a power outlet exclusively for each unit, and full disconnection means having a contact separation in all poles must be incorporated in the fixed wiring in accordance with the wiring rules.
- To prevent possible hazards from insulation failure, the unit must be grounded.

When Transporting

Be careful when picking up and moving the indoor and outdoor units. Get a partner to help, and bend your knees when lifting to reduce strain on your back. Sharp edges or thin aluminum fins on the air conditioner can cut your fingers.

When Installing…

…In a Room

Properly insulate any tubing run inside a room to prevent "sweating" that can cause dripping and water damage to walls and floors.

CAUTION Keep the fire alarm and the air outlet at least 1.5 m away from the unit.

…In Moist or Uneven Locations

Use a raised concrete pad or concrete blocks to provide a solid, level foundation for the outdoor unit. This prevents water damage and abnormal vibration.

…In an Area with High Winds

Securely anchor the outdoor unit down with bolts and a metal frame. Provide a suitable air baffle.

…In a Snowy Area (for Heat Pump-type Systems)

Install the outdoor unit on a raised platform that is higher than drifting snow. Provide snow vents.

When Connecting Refrigerant Tubing

WARNING

- When performing piping work do not mix air except for specifled refrigerant (R410A) in refrigeration cycle. It causes capacity down, and risk of explosion and injury due to high tension inside the refrigerant cycle.
- Refrigerant gas leakage may cause fire.

- Ventilate the room well, in the event that is refrigerant gas leaks during the installation. Be careful not to allow contact of the refrigerant gas with a flame as this will cause the generation of poisonous gas.
- Keep all tubing runs as short as possible.
- Use the flare method for connecting tubing.
- Apply refrigerant lubricant to the matching surfaces of the flare and union tubes before connecting them, then tighten the nut with a torque wrench for a leak-free connection.
- Check carefully for leaks before starting the test run.
- Do not leak refrigerant while piping work for an installation or re-installation, and while repairing refrigeration parts.
  Handle liquid refrigerant carefully as it may cause frostbite.

When Servicing

- Turn the power OFF at the main power box (mains) before opening the unit to check or repair electrical parts and wiring.
- Keep your fingers and clothing away from any moving parts.
- Clean up the site after you finish, remembering to check that no metal scraps or bits of wiring have been left inside the unit being serviced.

WARNING

- Do not clean inside the indoor and outdoor units by users. Engage authorized dealer or specialist for cleaning.
- In case of malfunction of this appliance, do not repair by yourself. Contact the sales dealer or service dealer for repair.

CAUTION

- Do not touch the air inlet or the sharp aluminum fins of the outdoor unit. You may get hurt.

- Ventilate any enclosed areas when installing or testing the refrigeration system. Escaped refrigerant gas, on contact with fire or heat, can produce dangerously toxic gas.
- Confirm after installation that no refrigerant gas is leaking. If the gas comes in contact with a burning stove, gas water heater, electric room heater or other heat source, it can cause the generation of poisonous gas.

Others

CAUTION

- Do not touch the air inlet or the sharp aluminum fins of the outdoor unit. You may hurt.
- Do not sit or step on the unit, you may fall down accidentally.
- Do not stick any object into the FAN CASE.
  You may be injured and the unit may be damaged.

Check of Density Limit

The room in which the air conditioner is to be installed requires a design that in the event of refrigerant gas leaking out, its density will not exceed a set limit.

The refrigerant (R410A), which is used in the air conditioner, is safe, without the toxicity or combustibility of ammonia, and is not restricted by laws imposed to protect the ozone layer. However, since it contains more than air, it poses the risk of suffocation if its density should rise excessively. Suffocation from leakage of refrigerant is almost non-existent. With the recent increase in the number of high density buildings, however, the installation of multi air conditioner systems is on the increase because of the need for effective use of floor space, individual control, energy conservation by curtailing heat and carrying power, etc.
Most importantly, the multi air conditioner system is able to replenish a large amount of refrigerant compared to conventional individual air conditioners. If a single unit of the multi air conditioner system is to be installed in a small room, select a suitable model and installation procedure so that if the refrigerant accidentally leaks out, its density does not reach the limit (and in the event of an emergency, measures can be made before injury can occur).
In a room where the density may exceed the limit, create an opening with adjacent rooms, or install mechanical ventilation combined with a gas leak detection device. The density is as given below.

$$\frac{\textbf{Total amount of refrigerant (kg)}}{\textbf{Min. volume of the indoor unit installed room (m}^3\textbf{)}} \leq \textbf{Density limit (kg/m}^3\textbf{)}$$

The density limit of refrigerant which is used in multi air conditioners is 0.3 kg/m^3 (ISO 5149).

NOTE

1. If there are 2 or more refrigerating systems in a single refrigerating device, the amount of refrigerant should be as charged in each independent device.

   For the amount of charge in this example:

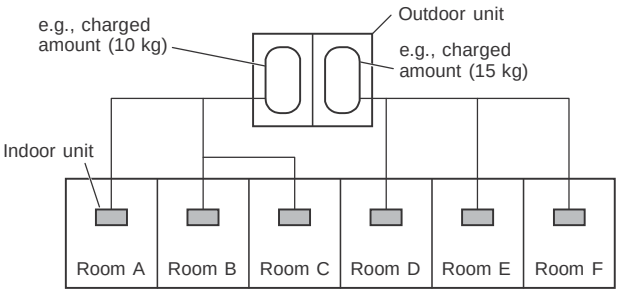

   The possible amount of leaked refrigerant gas in rooms A, B and C is 10 kg.
   The possible amount of leaked refrigerant gas in rooms D,

2. The standards for minimum room volume are as follows.

(1) No partition (shaded portion)

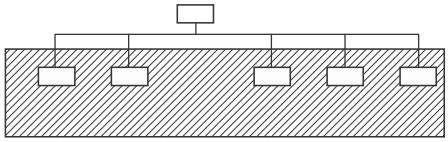

(2) When there is an effective opening with the adjacent room for ventilation of leaking refrigerant gas (opening without a door, or an opening 0.15% or larger than the respective floor spaces at the top or bottom of the door).

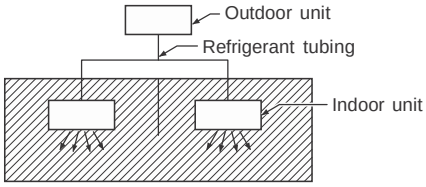

(3) If an indoor unit is installed in each partitioned room and the refrigerant tubing is interconnected, the smallest room of course becomes the object. But when mechanical ventilation is installed interlocked with a gas leakage detector in the smallest room where the density limit is exceeded, the volume of the next smallest room becomes the object.

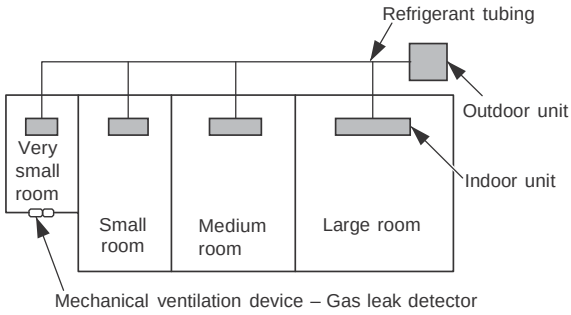

3. The minimum indoor floor space compared with the amount of refrigerant is roughly as follows: (When the ceiling is 2.7 m high)

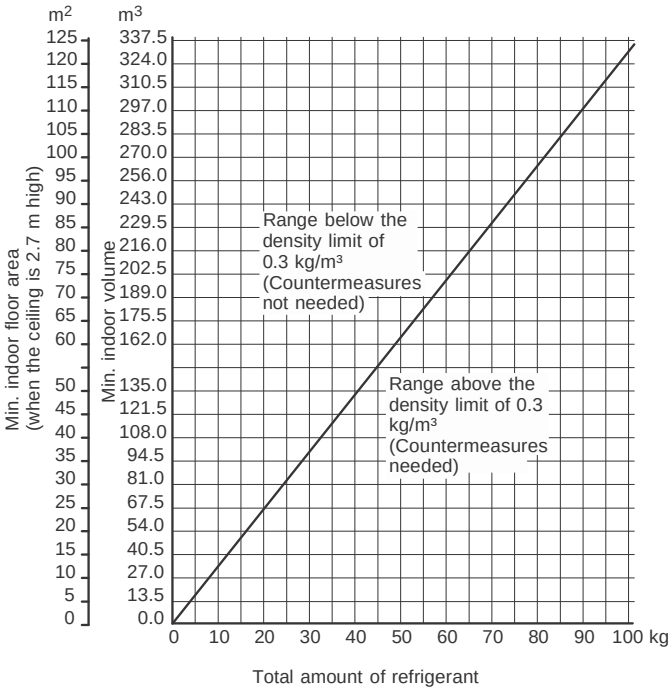

RoHS	· This product does not contain any hazardous substances prohibited by the RoHS Directive.
WARNING	· You are requested to use RoHS compliant parts for maintenance or repair.

CONTENTS

Section 1: CONTROL FUNCTIONS 1-1

1. Introduction 1-2
2. Selecting Outdoor Unit for Operation 1-3
3. Compressor Control 1-4
4. Special Controls 1-11
5. Other Controls 1-16
6. Operation of Solenoid Valves 1-17
7. Outdoor Unit Electronic Control Valves [MOV1, MOV2, MOV3, MOV4] 1-19
8. Outdoor Fan Control 1-21
9. Demand Control 1-22
10. Indoor Unit Control of the Electronic Control Valve 1-23
11. Solenoid Valve Kit Control 1-25
12. Indoor Special Control 1-26
13. Discharge Temperature 1-27
14. Current Protection 1-28
15. Low Oil Alarm 1-29
16. Pressure Sensor Failure 1-30
17. Backup Operation 1-31
18. Service Maintenance Functions 1-33
19. Other Functions 1-36

Section 2: OUTDOOR UNIT REPAIR PROCEDURES 2-1

1. Removing Panels 2-2
2. Removing Electrical Component Box and Duct 2-3
3. Discharging Compressor Oil 2-5
4. Backup Operation 2-6
5. Recovering Refrigerant 2-9
6. Checking for Leakage After Repair 2-14
7. Evacuating System 2-15
8. Charging Compressor Oil 2-16
9. Pumping Out Refrigerant from Outdoor Unit 2-20
10. Compressor 2-23
11. High and Low Pressure Sensors 2-38
12. Replacing 4-way valve 2-39

Section 3. OUTDOOR UNIT MAINTENANCE REMOTE CONTROLLER 3-1

1. Overview 3-2
2. Functions 3-3
3. Ordinary Display Controls and Functions 3-4
4. Monitoring Operations 3-9
5. Outdoor Unit Alarm History Monitor 3-11
6. Mode Settings 3-12

Section 4. REMOTE CONTROLLER FUNCTIONS 4-1

1. Simple Settings Function 4-2
2. Detailed Settings Function 4-4
3. Remote Controller Servicing Functions 4-15

Section 5. TROUBLE DIAGNOSIS 5-1

1. Contents of Remote Controller Switch Alarm Display **5**-2
2. Outdoor Unit Control Panel LED Display **5**-4
3. Remote Controller Servicing Functions **5**-5
4. 3-WAY Alarm Codes **5**-7
5. Blinking Inspection Display **5**-27
6. Inspection of Parts **5**-29
7. Test Pin **5**-30

1. CONTROL FUNCTIONS

1. **Introduction** **1-**2
2. **Selecting Outdoor Unit for Operation** **1-**3
3. **Compressor Control** **1-**4
4. **Special Controls** **1-**11
5. **Other Controls** **1-**16
6. **Operation of Solenoid Valves** **1-**17
7. **Outdoor Unit Electronic Control Valves [MOV1, MOV2, MOV3, MOV4]** **1-**19
8. **Outdoor Fan Control** **1-**21
9. **Demand Control** **1-**22
10. **Indoor Unit Control of the Electronic Control Valve** **1-**23
11. **Solenoid Valve Kit Control** **1-**25
12. **Indoor Special Control** **1-**26
13. **Discharge Temperature** **1-**27
14. **Current Protection** **1-**28
15. **Low Oil Alarm** **1-**29
16. **Pressure Sensor Failure** **1-**30
17. **Backup Operation** **1-**31
18. **Service Maintenance Functions** **1-**33
19. **Other Functions** **1-**36

The 3-WAY System is a system that allows multiple outdoor units to be connected. The outdoor units all contain inverter compressors, and the system does not utilize the sub units that were used in earlier systems.
The outdoor unit where the unit No. is set to “1” includes the CCU (command controller unit) functions that are used to control the entire system. As a result, the system will not operate if no outdoor unit has been set as unit No. “1.”

Required settings for Test Run

	Outdoor unit No. 1		**Outdoor unit Nos. 2 ~ 3**	
	At time of shipment	On-site setting	At time of shipment	On-site setting
System address	1	System 1 ~ 30	1	Not necessary
No. of indoor units	1	1 ~ 40 units	1	Not necessary
No. of outdoor units	1	1 ~ 3 units	1	Not necessary
Unit No.	1	Unit No. 1	1	Unit Nos. 2 ~ 3

This system can be expanded to connect a maximum of 3 outdoor units. (The system maximum capacity is 48 HP.)

The CCU functions are disabled at all units except the unit that is set as unit No. 1. Therefore no problems will result even if the system address, No. of indoor units, and No. of outdoor units settings are made at the other units. However, making these settings may be convenient for manual backup operation, as it eliminates the necessity of making the settings again if unit No. 1 fails. (If unit No. 1 fails, and the power supply to it is interrupted, it will be necessary to set a different unit as unit No. 1 in order to use manual backup operation.)

2. Selecting Outdoor Unit for Operation

2-1. Outdoor Unit Operating Rules

Because in this system all outdoor units contain an inverter compressor, ordinarily there is no absolute order of priority for compressor operation. Therefore there is no order of priority for the outdoor units.
However, it is possible to operate the outdoor units in sequence, beginning with unit No. 1, by using the outdoor unit maintenance remote controller to change the outdoor unit EEPROM settings.

* For information concerning EEPROM settings, refer to the field application functions.

2-2. Delayed Start of Outdoor Units

(1) Delayed start of outdoor units in the same system

If it is necessary to operate the compressors simultaneously at multiple outdoor units, each outdoor unit will start, beginning with unit No. 1, after a delay of a number of seconds equivalent to the outdoor unit address. **The units do not start simultaneously**.
This is in order to reduce the load on the power receiving equipment.

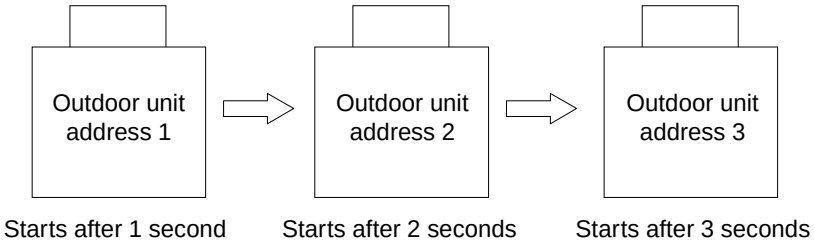

(2) Delayed start for each system

At the time of factory shipment, delayed start for each system is not set to occur. Therefore when systems are linked and multiple systems are selected for start simultaneously by the central control device, all systems will begin operating simultaneously. For this reason, a function is included to delay the start time for each system address when systems are linked and multiple systems are selected for start by the central control device.
In order to enable this delay time, it must be set in the EEPROM for each system. Those systems where this setting has been made will start after a delay according to their system addresses.

* For information concerning EEPROM settings, refer to the field application functions.

2-3. Outdoor Unit Stop Rules

(1) Simultaneous stop of multiple outdoor units

When all outdoor units, or multiple outdoor units, must stop, the units stop at the same time. However, depending on the communications timing, a difference of approximately 10 seconds may occur.

(2) Stopping individual outdoor units

- The last unit to stop operating is the outdoor unit that contains the inverter compressor with the shortest amount of operating time.
- If the indoor load decreases, and it becomes necessary to reduce the number of operating outdoor units, the compressors are stopped individually, in sequence. When all compressors installed in an outdoor unit have stopped, that outdoor unit also stops.

3. Compressor Control

3-1. Compressors Mounted in the Outdoor Units [U-8MF1E8, U-10MF1E8, U-12MF1E8, U-14MF1E8, U-16MF1E8]

Capacity			8 hp	10 hp	12 hp	14 hp	16 hp
Installed compressor	Compressor 1	Rotary	DC Inverter	DC Inverter	DC Inverter	DC Inverter	DC Inverter
	Compressor 2	Scroll	5 hp	6 hp	6.5 hp	5 hp	6 hp
	Compressor 3	Scroll	——	——	——	5 hp	6 hp

* For both 50 Hz and 60 Hz. hp = horsepower

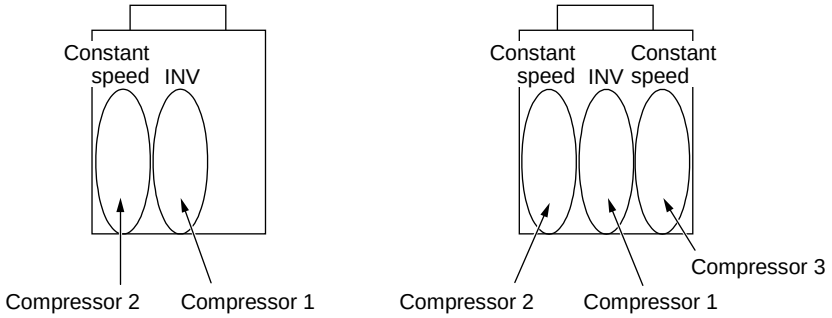

U-8MF1E8, 10MF1E8, 12MF1E8 **U-14MF1E8, 16MF1E8**

3-2. Compressor Selection Rules

Because all outdoor units in this system contain an inverter compressor, ordinarily there is no absolute order of priority for compressor operation.

(1) Normal compressor operation sequence (set at time of shipment)

At least one inverter compressor is always operating in order to make fine adjustments to the system lower-limit capacity. When multiple outdoor units are connected, each unit contains an inverter compressor. Therefore, the inverter which operates is the inverter with the shortest amount of operating time. After the first inverter compressor has started, the remaining inverter compressors and constant-speed compressors start operating in order of the compressors which have the shortest amount of operating time.

* Immediately after installation, all compressors have an operating time of zero. In this case, the compressors start in the following sequence: Inverter compressor > Constant-speed compressor 1 > Constant-speed compressor 2.

<Details>

The A/C units are selected with consideration for the maximum load. Therefore, in most cases the maximum capacity is not required. Ordinarily, the operating range of an inverter compressor is approximately 25 Hz – 90 Hz, however operating efficiency declines somewhat in the high-frequency operating range. With consideration for these characteristics, control of inverter compressors in this system is divided into two ranges, according to the frequencies. Ordinarily, for reasons of efficiency, the upper limit for operation is approximately 50 Hz. If greater capacity is required, the next compressor is started. When all compressors are operating and greater capacity is required, the inverter compressors are operated at frequencies above approximately 50 Hz. This control may increase the lifetimes of the inverter compressors and refrigerant oil.

* If the number of connected outdoor units is small, the number of inverter compressors is also small. Therefore, the compressors may operate at a high frequency even when the load is not large.

(2) Sequential operation beginning from unit No. 1

By using the outdoor unit maintenance remote controller to change the outdoor unit EEPROM settings, it is possible to start the units in sequence, beginning from unit No. 1.

* For information concerning EEPROM settings, refer to the field application functions.

3-3. Compressor Capacity Control

The compressor operating conditions vary depending on the indoor unit operating conditions and on the effects of indoor heat load, outside temperature, and other factors. Unit No. 1 (CCU) calculates the required capacity according to these operating conditions, and allocates the capacity requirement among the outdoor units, according to the compressor start/stop rules. Fine adjustments to system capacity control are made by the inverter compressors. (Depending on the conditions, all inverter compressors may be operating for fine adjustment.)

3-4. Inverter Compressor Capacity Control

(1) The inverter compressor has a center limit value and upper limit value for the operating frequency. These limits are set for each outdoor unit capacity.

(2) The inverter frequency during operation may be lower than the frequency listed above due to overload current protection control. In this case, the inverter frequency lower limit is 22 Hz.

* If Quiet mode is selected, the inverter may stabilize at a frequency lower than those stated above. For information about Quiet mode, refer to the field application functions.

3-5. Forced Compressor Stop

After a compressor stops, it will not start for a period of 3 minutes (3 minutes forced OFF). However, this does not apply when the compressor was forced to stop as the result of a control operation during the special controls (start control, defrost control, refrigerant oil recovery control, etc.) which are described later.

3-6. Roadmap Control

(1) The below controls are performed according to the pressure sensor on the outdoor unit, and the 2 temperature sensors attached to the indoor unit heat exchanger.

* With roadmap control, the pressure detected by the pressure sensor is converted to saturation temperature. A temperature that has been converted to saturation temperature is called the pressure sensor temperature.

(2) These controls are performed every 30 seconds.

(3) The temperatures used to determine the area (A, AB, B, C) for the evaporation temperature control shown in the figure on the next page, and for condensation temperature control, may vary depending on the relationships among factors including the difference between the room temperature setting and the indoor unit air intake temperature (= air intake temperature difference) and the difference between the air discharge temperature setting and the air discharge temperature (= air discharge temperature difference).

(4) Definitions of evaporation temperature and condensation temperature

Evaporation temperature (Te): Lowest heat exchanger temperature (E1, E3) at any indoor unit

Condensation temperature (Tc): Highest temperature among the outdoor unit pressure sensor temperature and the heat exchanger temperatures (E1) at all indoor units where the heating thermostat is ON.
Ordinarily, this is the outdoor unit pressure sensor temperature. (If multiple outdoor units are connected, this is the highest outdoor unit pressure sensor temperature.)

* E3 temperature is not used for condensation temperature detection, because it may indicate the temperature of superheated gas.

3-6-1. Evaporation Temperature (Te) Control: Control of Indoor Units Operating in Cooling Mode

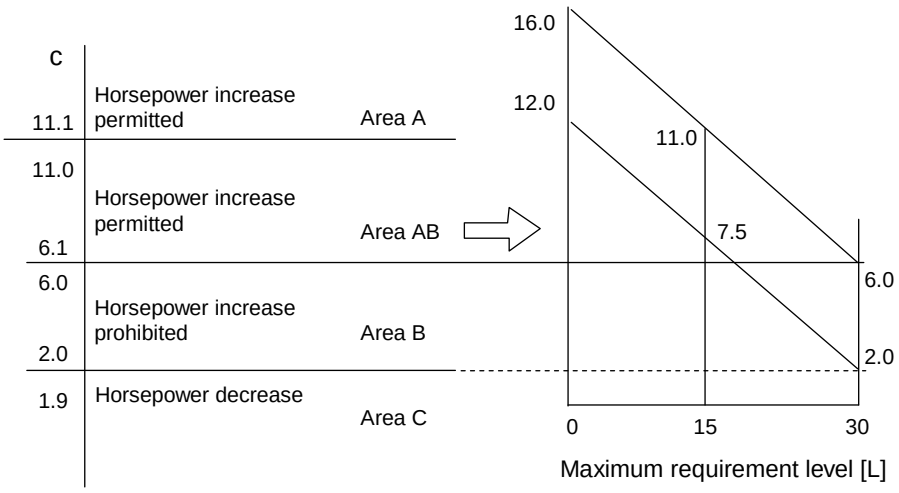

* Depending on the maximum requirement level of the indoor unit, the judgment temperatures for each area may vary as shown in the figure (example).

(1) For indoor units that are operating in Cooling mode, if one unit is selected for a test run, then the air intake temperature difference (difference between the room temperature setting and indoor unit air intake temperature) is ignored, and areas B and C are considered to be area A for control purposes. (This is used for additional charging, test run checks, etc.)
For this reason, vapor may be discharged if the test run continues for a long period of time, however this does not indicate a problem. In addition, the test run is canceled automatically after 1 hour.

(2) Even within the same area, the compressor capacity varies depending on the refrigerant temperature.

(3) For 6 minutes after the compressors start, area C is considered to be area B for control purposes.

(4) During special control, control of the compressor capacity according to Te is not performed.

(5) If the thermostat turns OFF while Te is within area C, the next time the compressor starts it may restart from a lower capacity.

(6) When the area changes to area C, area C is considered to be area B for control purposes for the first 6 minutes, even if the horsepower is the minimum value within the range where capacity control is possible (operation with inverter frequency of 25 Hz only). Subsequently if C area continues, the thermostat turns OFF.

3-6-2. Condensation Temperature (Tc) Control: Control when there are indoor units operating in Heating mode

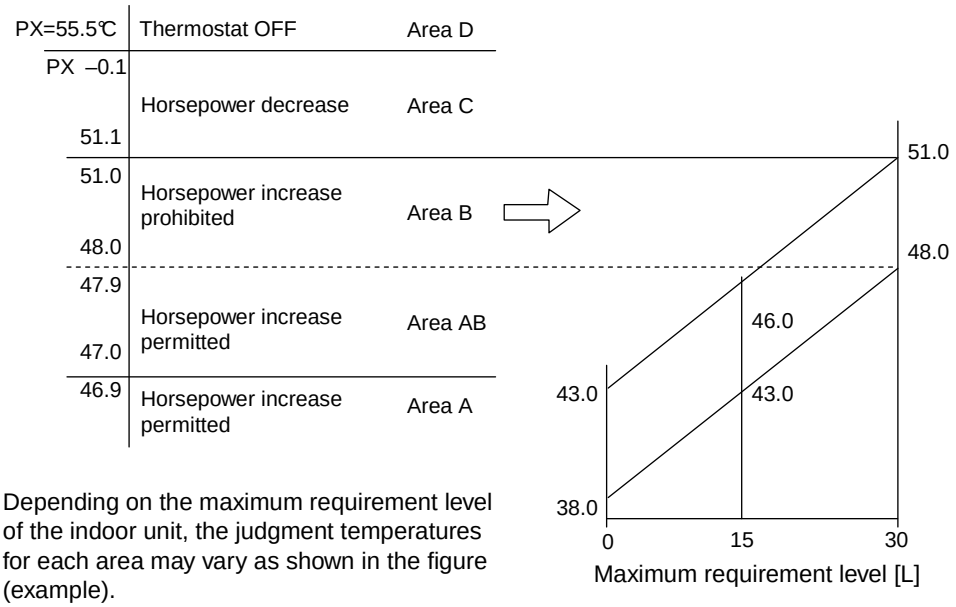

* Depending on the maximum requirement level of the indoor unit, the judgment temperatures for each area may vary as shown in the figure (example).

(1) For indoor units which are operating in Heating mode, if one unit is selected for a test run, the air intake temperature difference is ignored, however Tc control is performed according to the figure above in order to prevent excessive load. (This is used for test run checks, etc.)

(2) Even within the same area, the compressor capacity varies depending on the refrigerant temperature.

(3) Temperature PX is the coefficient value used to correct for any deviation with the high pressure or condensation temperature. It may vary. (At the time of shipment it is 55.5℃.)

(4) If the condensation temperature (Tc) enters area D and the thermostat turns OFF, the next time the compressor starts it may restart from a lower capacity.

(5) When the area changes to area C, area C is considered to be area B for control purposes for the first 6 minutes, even if the horsepower is the minimum value within the range where capacity control is possible (operation with inverter frequency of 25 Hz only). Subsequently if C area continues, the thermostat turns OFF.

3-6-3. Control of condensation temperature and evaporation temperature during mixed cooling/heating operation

During mixed cooling/heating operation, the control maintains a heat balance with a target evaporation temperature (Te) for the Cooling mode indoor units of 2 ~ 6℃ a nd a target condensation temperature (Tc) for the Heating mode indoor units of 48 ~ 51℃.

Heat balance control is performed by varying the compressor capacity and heat discharge (heat intake) of the heat exchanger.

(1) Increasing/decreasing the compressor capacity

- *When evaporation temperature (Te) is high and condensation temperature (Tc) is low*
  This occurs when both the cooling capacity (heat intake) and the heating capacity (heat discharge) are low. The compressor capacity and the circulation flow of refrigerant are increased in order to lower the evaporation temperature (Te) and raise the condensation temperature (Tc).
- *When evaporation temperature (Te) is low and condensation temperature (Tc) is high*
  This occurs when both the cooling capacity (heat intake) and the heating capacity (heat discharge) are high. The compressor capacity and the circulation flow of refrigerant are decreased in order to raise the evaporation temperature (Te) and lower the condensation temperature (Tc).
  * Under conditions other than those listed above, the capacity of the outdoor unit heat exchanger is adjusted. In some cases the heat exchanger capacity may also be adjusted at the same time when the compressor capacity is varied.

Compressor Control Table

		Low ← Condensation Temp. [Tc] → High			
		A	B	C	D
Low ← Evaporation Temp. [Te] → High	A	UP	not_UP		STOP
	B	slow_UP	Target		
	C	not_UP	DOWN		

Evaporation temperature (Te) and condensation temperature (Tc) areas A, B, C, and D are the same as for evaporation temperature control and condensation temperature control.

(2) Increasing/decreasing the heat exchanger capacity (when the outdoor unit heat exchanger is functioning as a condenser)

- *Primarily when both the evaporation temperature (Te) and condensation temperature (Tc) are high*
  This occurs when the cooling capacity (heat intake) is low and the heating capacity (heat discharge) is high. The outdoor heat exchanger capacity is increased, increasing the system condensation capacity and lowering the condensation temperature (Tc). The amount of heat discharge at the outdoor unit heat exchanger increases, increasing the heat intake at the Cooling mode indoor units and lowering the evaporation temperature (Te).
- *Primarily when both the evaporation temperature (Te) and condensation temperature (Tc) are low*
  This occurs when the cooling capacity (heat intake) is high and the heating capacity (heat discharge) is low. The outdoor heat exchanger capacity is decreased, decreasing the system condensation capacity and raising the condensation temperature (Tc). The amount of heat discharge at the outdoor unit heat exchanger decreases, decreasing the heat intake at the Cooling mode indoor units and raising the evaporation temperature (Te).

Outdoor Unit Heat Exchanger Control Table (when the outdoor unit heat exchanger is functioning as a condenser)

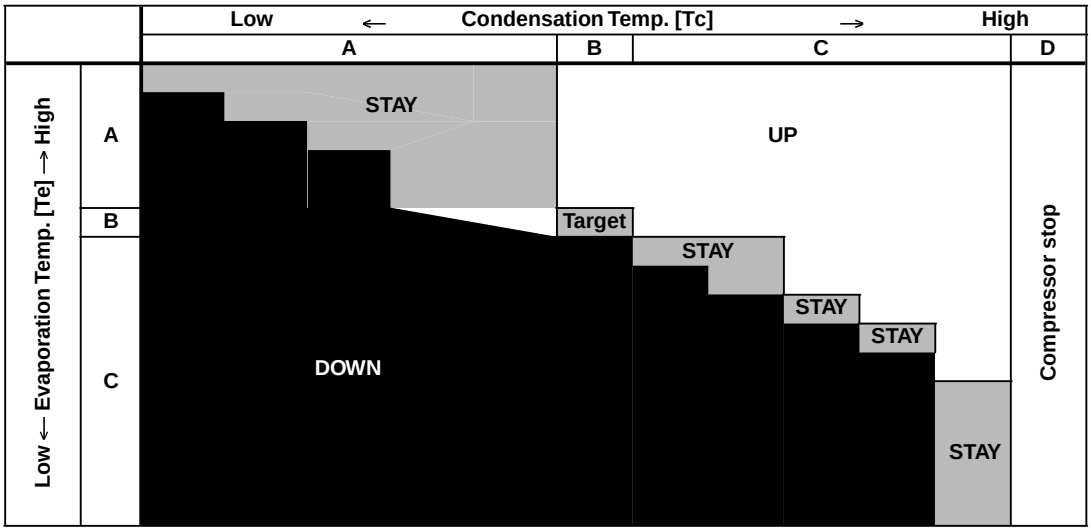

(3) Increasing/decreasing the heat exchanger capacity (when the outdoor unit heat exchanger is functioning as an evaporator)

- *Primarily when both the evaporation temperature (Te) and condensation temperature (Tc) are low*
  This occurs when the cooling capacity (heat intake) is high and the heating capacity (heat discharge) is low. The outdoor heat exchanger capacity is increased, increasing the system evaporation capacity and raising the evaporation temperature (Te). The amount of heat intake at the outdoor unit heat exchanger increases, increasing the heat discharge at the Heating mode indoor units and raising the condensation temperature (Tc).
- *Primarily when both the evaporation temperature (Te) and condensation temperature (Tc) are high*
  This occurs when the cooling capacity (heat intake) is low and the heating capacity (heat discharge) is high. The outdoor heat exchanger capacity is decreased, decreasing the system evaporation capacity and lowering the evaporation temperature (Te). The amount of heat intake at the outdoor unit heat exchanger decreases, decreasing the heat discharge at the Heating mode indoor units and lowering the condensation temperature (Tc).

Outdoor Heat Exchanger Control Table (when the outdoor heat exchanger is functioning as an evaporator)

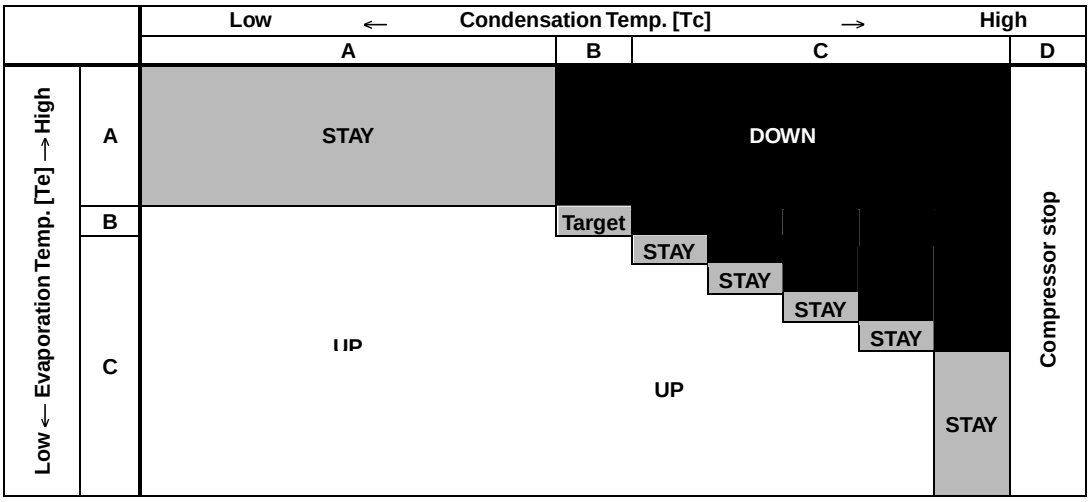

3-6-4. Protection control

Protection control consists of 2 types of protection: air discharge temperature protection and current protection. The limit values from this protection control are incorporated into the output compressor capacity increase/decrease values that were calculated from control based on the temperature at the indoor unit heat exchanger (roadmap control).

* In some cases, the control shown below may stop the compressor, issue a warning, or reduce the compressor capacity.

(1) Air discharge temperature protection
During operation when only a single outdoor unit is installed, the air discharge temperature level is determined (the highest value is used), and the compressor capacity is limited, by using the air discharge temperature of the operating compressor (as shown in the tables below).

Air discharge temperature level: Highest level among the air discharge temperature levels of all compressors

Air discharge temp. level	Discharge temp.	Horsepower limit
5	104	Decrease by 2 horsepower
4	103	Decrease by 1 horsepower
3	102	Decrease by 0.5 horsepower
2	99~ Less than 102	Prohibit horsepower increase
1	97 ~ Less than 99	Permit horsepower increase
0	Less than 97	No control

The values shown in the table above are reduced to the values calculated by roadmap control.

(2) Current protection

Inverter compressor current control is composed of primary current control and secondary current control. Current protection control for the inverter compressor is performed by self-protection in the inverter circuit, and does not increase or decrease the compressor capacity.

Primary current	Secondary current		
–	75 or (150 ℃)	Thermostat OFF	Operation stops instantaneously due to activation of hybrid IC
–	18.5 or above	Thermostat OFF	Thermostat OFF. Operation stops for 100 ms for current protection
26.5	14.5 ~ 18.5	Horsepower decreased	
25	14 ~ Less than 14.5	Prohibit horsepower increase	
24	Less than 14	Permit horsepower increase	

3-6-5. Roadmap control after trip

When restarting after trip stop occurs, the horsepower may increase slowly depending on the trip counter value.

(1) If Trip counter = 1, the horsepower increases at a speed that is 1/2 of ordinary roadmap control.

(2) If Trip counter = 2, the horsepower increases at a speed that is 1/3 of ordinary roadmap control.

The trip counter is cleared if no trip occurs within 10 minutes after operation starts.

4. Special Controls

In addition to ordinary heating and cooling operation, this system also includes the following 3 types of special controls for control of the system as a whole.

1. Tube refrigerant recovery control
2. System refrigerant oil recovery control
3. Defrost control

4-1. Tube Refrigerant Recovery Control

This control recovers refrigerant from the tubing when the microcomputer is initialized immediately after power-ON, after warning output occurs, and after a set amount of time has elapsed (standard = 60 minutes) when all outdoor units are stopped.
This control is intended to recover refrigerant if refrigerant has accumulated somewhere in the tubing when the units have been stopped for long periods, as well as to compensate for tubing thermal loss during heating start, and is also used for oil recovery.

(1) Control when the outdoor unit heat exchanger is acting as a condenser (when all units are in Cooling mode or at start of mixed operation when the cooling load is high)

Control time		60 seconds
Outdoor units		All outdoor units operate at maximum horsepower.
Indoor units	Electronic control valve	Valves at all indoor units operate at a fixed pulse according to the indoor unit capacity.
	RAP valve kit	Valve kits at all indoor units operate in Cooling mode (ON status).
	Fan	Fan operates at the set fan speed, stops, or operates at L speed, depending on the indoor unit operation mode.

* When the above operation is finished, normal operation starts at the horsepower determined by the indoor units where thermostats are ON.

(2) Control when outdoor unit heat exchanger is acting as a condenser (when all units are in Cooling mode or at start of mixed operation when cooling load is high)

Control time		Minimum 1 min – Maximum 10 min [until max (pressure sensor temp., E1) ≥ 35℃]
Outdoor units		All outdoor units operate at maximum horsepower.
Indoor units	Electronic control valve	Valves at all indoor units operate at 480 pulses.
	RAP valve kit	Valve kits at all indoor units operate in heating mode (ON status).
	Fan	Fan operates at the set fan speed, stops, or operates at L speed, depending on the indoor unit operation mode.

* When the above operation is finished, normal operation starts at the horsepower determined by the indoor units where thermostats are ON.

4-2. System Refrigerant Oil Recovery Control

4-2-1. System refrigerant oil recovery cycle

This control is performed using the cooling cycle during cooling operation and using the heating cycle during heating operation.

4-2-2. Start of system refrigerant oil recovery control

When the oil level in an operating compressor changes to 0, the compressor stops after 120 seconds. If this compressor repeats this operation 3 times and the oil level does not reach 2, system refrigerant oil recovery control is started.

* When the compressor has stopped because the oil level is 0, a count is added to the alarm counter. The counter for this compressor is not cleared unless the oil level for that compressor reaches 2, or else alarm output occurs.

1

4-2-3. Flow of system refrigerant oil recovery control

(1) Simplified flow of system refrigerant oil recovery control
System refrigerant oil recovery control follows this flow:
Normal operation → 3-minute stop (May stop for 6 minutes.) → System refrigerant oil recovery control (Max. 3 minutes) → 3-minute stop → Normal operation

(2) Cooling cycle

Control time		Maximum 3 minutes (Stops once before and once after control.)
Outdoor units		All outdoor units operate at maximum horsepower.
Indoor units	Electronic control valve	Valves at all indoor units operate at a fixed pulse according to the indoor unit capacity.
	RAP valve kit	Valve kits at all indoor units operate in Cooling mode (OFF status.)
	Fan	Fan operates at the set fan speed, stops, or operates at L speed, depending on the indoor unit operation mode.

(3) Heating cycle

Control time		Maximum 3 minutes (Stops once before and once after control.)
Outdoor units		All outdoor units operate at maximum horsepower.
Indoor units	Electronic control valve	Valves at all indoor units operate at 480 pulses.
	RAP valve kit	Valve kits at all indoor units operate in Heating mode (ON status).
	Fan	Fan operates at the set fan speed, stops, or operates at L speed, depending on the indoor unit operation mode.

4-3. Defrost Control

4-3-1. Defrost control method

This system uses the following 2 defrost methods.
(1) If there is 1 outdoor unit in the refrigerant system: Reverse cycle defrost
(2) If there are 2 or more outdoor units in the refrigerant system: Outdoor unit cycle defrost

4-3-2. Constraint conditions

(1) Frost detection does not occur for 5 minutes after operation starts.
(2) Defrost does not begin again for 35 minutes of A/C operation after defrost was once completed.
(3) If all indoor units are stopped while defrost control is in effect, or if the outdoor unit is stopped due to protection control or another reason, then defrost control will not start for a minimum of 10 minutes after restart occurs.

4-3-3. Frost detection

(A) Frost detection does not occur for 5 minutes after operation starts.
(B) Frost is detected when either condition 1 or 2 below is met.

Condition 1: L2 line or below is detected twice, each time continuously for 4 minutes, when the compressor is operating.
Condition 2: L1 line or below is detected for a total of 60 minutes when the compressor is operating.

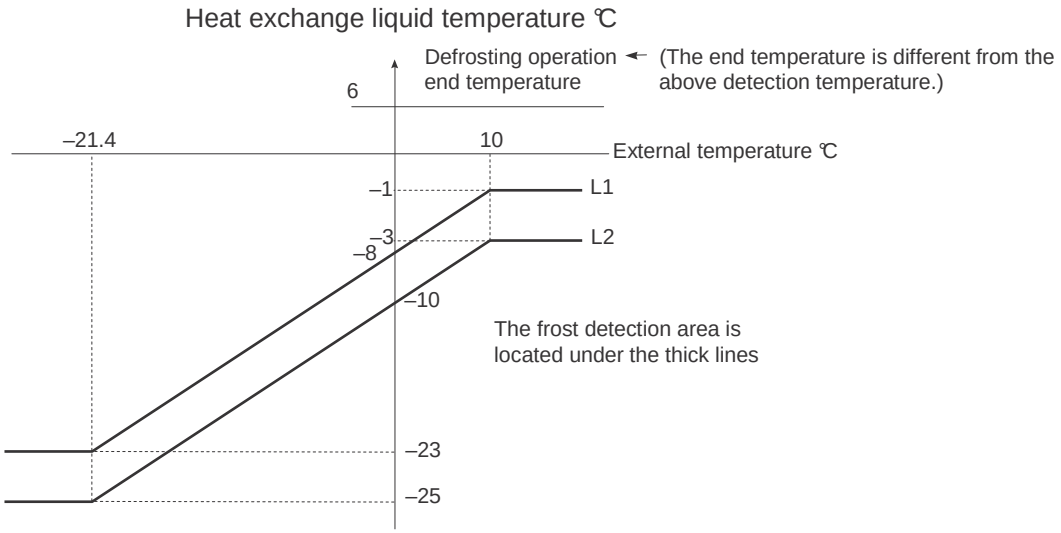

4-3-4. Outdoor units where defrost occurs

Even if the total time has not reached 35 minutes, if there is 1 or more outdoor units that fulfills the defrost detection conditions, all operating outdoor units perform defrost control at the same time.

* Defrost control is also performed at outdoor units where the outdoor unit heat exchanger is not functioning as an evaporator (such as stopped outdoor units).

4-3-5. Reverse cycle defrost

Reverse cycle defrost is performed in systems where only 1 outdoor unit is connected to the refrigerant system.

- Defrost flow
  E: Evaporator operation
  C: Condenser operation
  S: Shut off
  E→C: Switching from evaporator operation to condenser operation
  C→E: Switching from condenser operation to evaporator operation

			Defrost preparation	Defrost in progress		Defrost end
Outdoor unit status			E→C	C	Defrost end judgment	C→E
Compressor			Stopped	Operating		Stopped
Remote Controller	Mode		—	—		—
Stop	←		S	E		S
		*1 (Cooling)	S	E		S
		*2 (Heating)	C→E	E		E→C
Fan	←		S	E		S
		*1 (Cooling)	S	E		S
		*2 (Heating)	C→E	E		E→C
Cooling	←	Thermostat ON	E	E		E
		Thermostat OFF	S	E		S
Heating	←	Thermostat ON	C→E	E		E→C
		Thermostat OFF	C→E	E		E→C
Auto	Auto. Cooling	Thermostat ON	E	E		E
		Thermostat OFF	S	E		S
	Auto. Heating	Thermostat ON	C→E	E		E→C
		Thermostat OFF	C→E	E		E→C
Time			1 min	Max. 12 min		1 min

* Type E1 performs "E → C" for 3 minutes after defrost ends. Therefore, the thermostat remains OFF for 3 minutes.

*1: Function when a common use solenoid valve kit is used and there are more than one (1) indoor unit in the cooling mode within the same solenoid valve kit.

*2: Function when a common use solenoid valve kit is used and here are more than one (1) indoor unit in the heating mode within the same solenoid valve kit.

1

4-3-6. Outdoor unit cycle defrost

Outdoor unit cycle defrost is performed in systems where 2 or more outdoor units are connected to the refrigerant system.

(1) Description of outdoor unit cycle defrost

With this defrost method, when 1 outdoor unit operates in defrost mode (heat exchanger operating as a condenser), another outdoor unit operates as an evaporator in the same way as in ordinary heating mode. In this way, the other outdoor unit is heating the unit where defrost is occurring. When 1 outdoor unit completes defrost, the other outdoor unit performs defrost in the same way. Because the amount of time that the unit operates as an evaporator is very short, there is little danger of frost forming again quickly. Rather, because the heat source is very powerful, it is possible to shorten the defrost operating time.

(2) Defrost sequence

Outdoor unit cycle defrost is always completed in 2 defrost operations.

(A) When there are 2 outdoor units

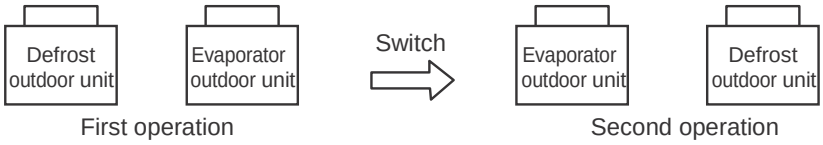

(B) When there are 3 outdoor units

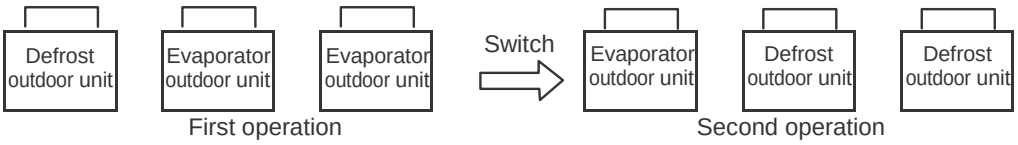

• Defrost flow
E: Evaporator operation
C: Condenser operation
S: Shut off
E→C: Switching from evaporator operation to condenser operation
C→E: Switching from condenser operation to evaporator operation

			Defrost preparation	Defrost in progress		Switch	Defrost in progress		Defrost end
				1st outdoor unit :Defrost in progress		—	2nd outdoor unit :Defrost in progress		
Outdoor unit(s) where defrost occurs first			E →C	C	Defrost end judgment	C →E	E	Defrost end judgment	E or S
Outdoor unit(s) where defrost occurs secondly			E	E		E →C	C		C →E or S
Compressor			Operating	Operating		Stopped	Operating		Stopped
Remote Controller	Mode		—	—		—	—		—
Stop	←		S	S		S	S		S
		*1 (Cooling)	S	S		S	S		S
		*2 (Heating)	C	C		C	C		C
Fan	←		S	S		S	S		S
		*1 (Cooling)	S	S		S	S		S
		*2 (Heating)	C	C		C	C		C
Cooling	←	Thermostat ON	E	E		E	E		E
		Thermostat OFF	S	S		S	S		S
Heating	←	Thermostat ON	C	C		C	C		C
		Thermostat OFF	C	C		C	C		C
Auto	Auto. Cooling	Thermostat ON	E	E		E	E		E
		Thermostat OFF	S	S		S	S		S
	Auto. Heating	Thermostat ON	C	C		C	C		C
		Thermostat OFF	C	C		C	C		C
Time			1 min	Max. 7 min		1 min	Max. 7 min		1 min

* Type E1 performs "E → C" for 3 minutes after defrost ends. Therefore, the thermostat remains OFF for 3 minutes.

*1: Function when a common use solenoid valve kit is used and there are more than one (1) indoor unit in the cooling mode within the same solenoid valve kit.

*2: Function when a common use solenoid valve kit is used and there are more than one (1) indoor unit in the heating mode within the same solenoid valve kit.

4-3-7. Defrost end judgment conditions

Defrost ends when either of the below defrost end judgment conditions is met.

Condition 1: The temperatures are 6℃ or higher at all temperatures sensors installed on the outdoor unit heat exchangers.
However, if there is any other outdoor unit where the defrost end condition has not been met, defrost control continues for all outdoor units, and system defrost control is not ended.

Condition 2: The maximum defrost time listed in the table above has elapsed.

4-3-8. System defrost end

When all outdoor units where defrost control is in effect have met the defrost end conditions, defrost control is ended for the system.

5-1. Oil Control

5-1-1. Oil level

Oil level	Meaning	Oil state	Assessment
2	Sufficient	There is more than an adequate amount of oil in the compressor.	This is the normal operating state of the system and not a problem.
1	Slightly low	The compressor may contain an adequate amount of oil, but it may also contain less than an adequate amount of oil.	Check that oil control recovers oil.
0	Extremely low	There is not enough oil in the compressor.	Check that system oil recovery control restores the oil level.

The compressor contains enough oil when the oil level is in the range between level 2 and until it has just become 1. Thus oil level 1 does not mean that the compressor is empty of oil. When the compressor reaches oil level 0 during operation, the system is likely to run out of oil within 5 to 10 minutes. Check for oil leaks and make sure that refrigerant pipes are intact.

5-1-2. Oil level detection

Excess oil in the compressor is sent by bypass via a capillary tube to the low-pressure circuit. The temperature detected by a temperature sensor is used to determine whether it is oil (warm) or refrigerant (cold).

5-1-3. Self-separator oil recovery control

* When a low oil level is detected, this control recovers the oil which has accumulated in that oil separator and sends it to the compressor.

(1) Operation when oil level is 1
30 seconds after the oil level changes from 2 to 1, both the balance valve and recovery valve turn ON for up to 2 minutes.
However, if the oil level becomes 2 during these 2 minutes, this control is stopped.
When this control has been stopped, it will not restart for 3.5 minutes unless the oil level becomes 0.

(2) Operation when oil level is 0
Both the balance valve and recovery valve turn ON and remain ON.

5-1-4. Unit refrigerant oil recovery control – utilizing balance tubes

* If the low oil level continues, that outdoor unit (oil-receiving outdoor unit) receives a supply of oil from operating outdoor units where the oil level is not low (oil-supply outdoor units).

(1) Control at the oil-supply outdoor unit begins 3 minutes after the oil level at the outdoor unit changes to 0 or 1. Oil supply is performed for a maximum of 5 minutes from each unit.

(2) When oil supply is ended, oil supply from that outdoor unit will not occur again for a period of [(No. of outdoor units – 1) x 5 minutes]. In addition, oil supply is ended if the oil-receiving outdoor unit oil level changes to 2, or if the oil-supply outdoor unit oil level becomes low.

(3) The supply of oil is received from 1 unit at a time, in sequence, according to the order of priority of their inverter compressors.

(4) Operation during unit refrigerant oil recovery

(A) Oil-receiving outdoor unit
The recovery valve turns ON and remains ON.
* Because self-separator oil recovery may occur simultaneously at the same unit, both the balance valve and recovery valve turn ON at this time.

(B) Oil-supply outdoor unit
The balance valve turns ON and remains ON.
The bypass valve repeatedly turns ON and OFF according to a fixed cycle.
* When the balance valve is ON, the oil in the oil separator is discharged into the balance tube. The bypass valve releases high-pressure gas which forces this oil toward the oil-receiving outdoor unit, and flushes out the balance tubes.
The operation of this bypass valve allows oil to be supplied even when there is a difference in height between the outdoor units.

5-1-5. Indoor unit refrigerant oil self-recovery control

Refer to the items concerned with indoor unit special control.

6. Operation of Solenoid Valves

6-1. Refrigerant Control Valve [RCV]

The main purpose of this valve is to detect the flow of refrigerant (refrigerant volume) on the indoor-unit side when the outdoor unit heat exchanger is functioning as a condenser. When the valve determines that there are signs of a low refrigerant level, refrigerant is supplied from the receiver tank to the system.

(1) The OFF conditions take priority over the ON conditions for this valve.

(2) This valve is OFF when the outdoor unit is stopped.

(3) This valve is ON when special control is in progress.

(4) Control during normal operation

(A) Cooling operation

- This valve turns ON when symptoms of insufficient refrigerant gas occur at an indoor unit.
- This valve turns ON when the outdoor air temperature is 15℃ or below. (Under these conditions the high pressure is low and refrigerant flow becomes poor.)
- This valve turns OFF when symptoms of refrigerant overcharge are detected at the outdoor unit.

(B) Mixed cooling/heating operation

- The RCV turns ON at stopped outdoor units when the heat exchanger at another outdoor unit is functioning as a condenser.

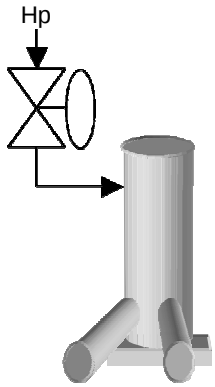

6-2. Refrigerant Balance Valve [RBV] – Gas Purge Valve

The main purpose of this valve is to detect the flow of refrigerant (refrigerant volume) on the indoor-unit side when the outdoor unit heat exchanger is functioning as an evaporator. When the valve determines that there are signs of excess refrigerant, refrigerant is recovered at the receiver tank.
This valve is ON during heating operation and when the outdoor unit heat exchanger is functioning as an evaporator during mixed heating/cooling operation. It also turns ON in order to recover refrigerant at the outdoor unit after heating operation is stopped.
* This valve is never ON at the same time as the RCV.

(1) The OFF conditions take priority over the ON conditions for this valve.

(2) This valve turns ON for 30 – 50 seconds after the outdoor unit stops, and then turns OFF.

(3) This valve turns ON once after the outdoor unit starts.

(A) Heating operation

- This valve turns ON when poor refrigerant flow at an indoor unit is detected, and when symptoms of overcharge are detected.
  After the valve turns OFF, it will not turn ON again for 15 minutes.

(B) Mixed heating/cooling operation

- This valve turns ON when poor refrigerant flow at an indoor unit is detected, and when symptoms of overcharge are detected, if the heat exchanger at the outdoor unit is functioning as an evaporator.

(4) This valve turns OFF when an abnormal drop in discharge gas temperature is detected.

(5) This valve turns OFF when a drop in the detected receiver tank temperature continues for a set length of time, and when liquid back-flow is judged to be occurring.

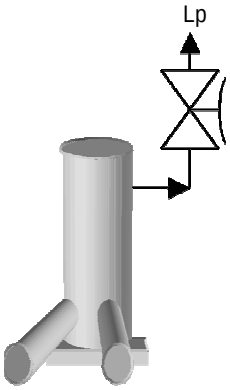

6-3. Balance Valve (BALV)

This valve moves some of the oil from the oil separator to the balance tube.

(1) When unit is stopped
This valve is always OFF.

(2) When unit is operating
(A) This valve is ON when separator oil self-recovery control is in progress.
(B) This valve is ON when unit refrigerant oil recovery control is in progress (oil-supply unit).
(C) This valve turns ON for 30 seconds each time a constant-speed compressor starts.
(D) This valve turns ON for 60 seconds after defrost control ends.

6-4. Recovery Valve (ORVR)

This valve recovers refrigerant oil from the balance tube to the compressor.

(1) When unit is stopped
This valve is always OFF.

(2) When unit is operating
(A) This valve is ON when separator oil self-recovery control is in progress.
(B) This valve is ON when unit refrigerant oil recovery control is in progress (oil-receiving unit).
(C) This valve is ON when control for insufficient gas is in progress.
(D) This valve turns ON for 60 seconds after a constant-speed compressor starts.
(E) This valve turns ON for 120 seconds after defrost control ends.
(F) This valve turns ON for 10 seconds after the outdoor unit stops.
(G) This valve remains OFF at all times other than (A) – (F) above.

6-5. Bypass Valve (BPV)

This valve flushes the oil from the balance tubes. In addition, it is used for recovering refrigerant from stopped outdoor units during cooling operation.

(1) When unit is stopped
This valve is always OFF.

(2) When unit is operating
This valve is ON at the oil-supply outdoor unit when unit refrigerant oil recovery control is in progress.
* This valve repeatedly turns ON/OFF at regular intervals during unit refrigerant oil recovery control. (It is not constantly ON.)

7. Outdoor Unit Electronic Control Valves [MOV1, MOV2, MOV3, MOV4]

7-1. Types of Electronic Control Valves [U-8MF1E8, U-10MF1E8, U-12MF1E8, U-14MF1E8, U-16MF1E8]

	Capacity	8 hp	10 hp	12 hp	14 hp	16 hp
Electronic control valve	Electronic control valve 1	Heat exchanger 1 valve	Heat exchanger 1 valve	Heat exchanger 1 valve	Heat exchanger 1 valve	Heat exchanger 1 valve
	Electronic control valve 2	Heat exchanger 2 valve	Heat exchanger 2 valve	Heat exchanger 2 valve	Heat exchanger 2 valve	Heat exchanger 2 valve
	Electronic control valve 3	None	None	None	Heat exchanger 3 valve	Heat exchanger 3 valve
	Electronic control valve 4	For SC circuit	For SC circuit	For SC circuit	For SC circuit	For SC circuit

7-2. Power Initialization

If no indoor units have started (even once) after the power was turned ON, the outdoor unit electronic control valve operates at 480 pulses.

7-3. Heat Exchanger Controlled by Each Electronic Control Valve

The configuration of the heat exchangers is different depending on the capacity of the outdoor unit. MOV3 is not present in U-12MF1E8 and below.

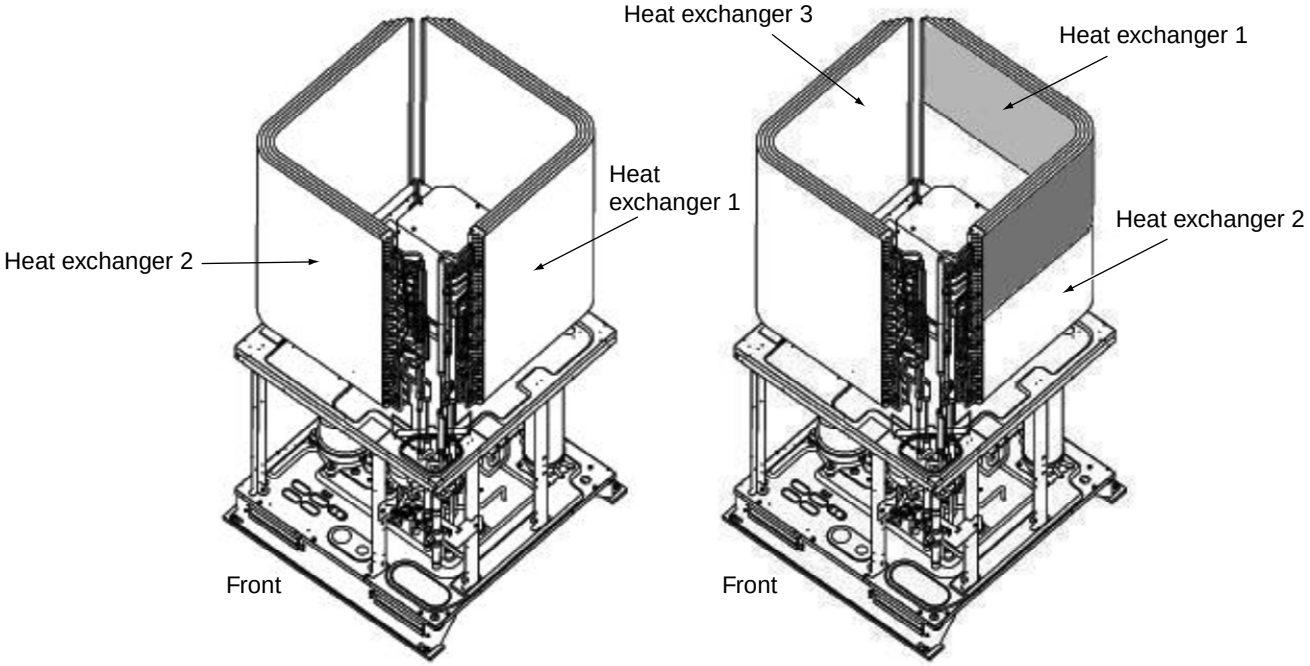

U-8MF1E8, 10MF1E8, 12MF1E8 **U-14MF1E8, 16MF1E8**

Operation of electronic control valves during normal unit operation

		Heat exchanger status	MOV1	MOV2	MOV3	Remarks
All indoor units in Cooling mode		Condensor	480	480	480	Maximum flow control
		Stopped	0	0	0	Refrigerant shut-off
All indoor units in Heating mode		Evaporator	45~480	15~480	15~480	SH control
		Stopped	0	0	0	Refrigerant shut-off
Mixed heating/ cooling operation	Outdoor heat exchanger condenser	Condensor	50~480	50~480	480	Heat exchanger capacity control
		Stopped	0	0	0	Refrigerant shut-off
	Outdoor heat exchanger evaporator	Evaporator	45~480	15~480	15~480	SH control
		Stopped	0	0	0	Refrigerant shut-off

- When all indoor units are operating in Cooling mode or Heating mode, all outdoor unit heat exchangers are used if even one of the compressors in that outdoor unit is operating.
- During mixed heating/cooling operation, the number of heat exchangers used varies according to the conditions of the indoor units. However, heat exchanger 1 at the outdoor unit which contains the inverter compressor with the lowest amount of operating time is always used.
- SH control controls the difference between the liquid temperature and gas temperature to 1 ~ 5℃.
- During heating mode SH operation, refrigerant may not flow to the heat exchanger.

7-4. SC Circuit Electronic Control Valve [MOV4]

(1) Operation to increase SC

During cooling operation, or mixed heating/cooling operation when the outdoor unit heat exchanger is functioning as a condenser, the liquid refrigerant which condenses at the outdoor unit heat exchanger flows into the receiver tank, and SC (sub-cool = supercooling) approaches 0℃. When SC is small and the length of the tubing connecting the indoor and outdoor units is long, the pressure loss increases, possibly resulting in lower capacities. Therefore, MOV4 operates at the double tube near the discharge port of the outdoor unit in order to increase SC.

MOV4 uses the receiver tank detection sensor and low-pressure sensor located near the accumulator to perform control in order to prevent liquid back-up.

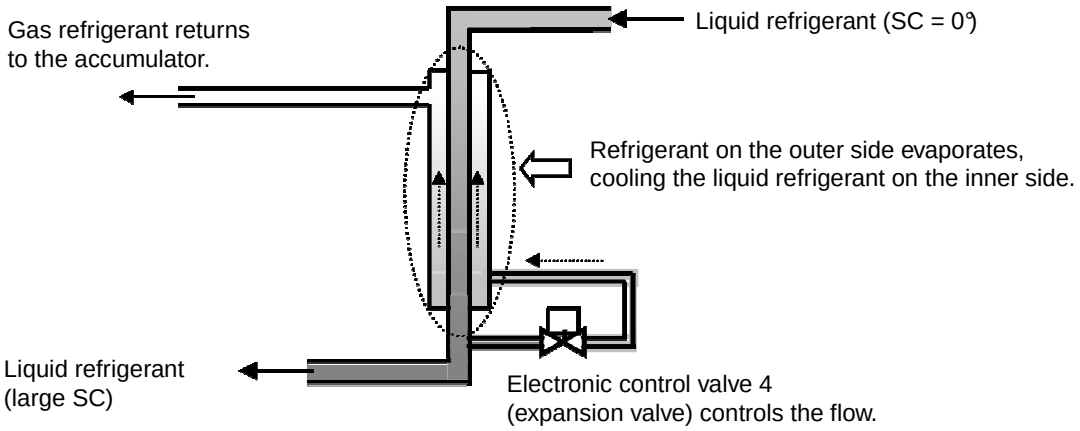

(2) Operation when discharge temperature is high

When the discharge temperature increases, the SC circuit electronic control valve opens to 480 pulses. This intentionally causes a mild liquid back-up, cooling the compressor. This operation takes priority over operation intended to increase SC. It is performed at top priority in all operating modes.

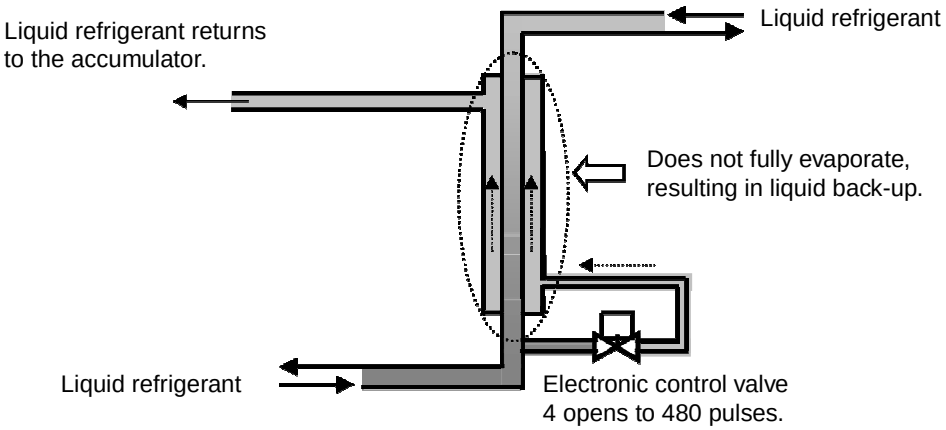

8. Outdoor Fan Control

8-1. Fan mode

These outdoor units utilize a DC fan motor that can be controlled in a maximum of 16 steps (16 modes).
However, fan modes 15 and 16 can only be used if high static-pressure mode has been set.

* For information concerning EEPROM settings, refer to the field application functions.

8-2. Outdoor Fan Min. Fan Mode and Max. Fan Mode

	Min. fan mode	Max. fan mode
Cooling operation	Outdoor air temp. > 15℃: 1 Outdoor air temp. ≤ 15℃: 0	14
Heating operation	1	14

* Even if the fan mode is 0 during cooling operation, the fan mode may change to 1 at regular intervals for temperature protection of the inverter hybrid IC.

8-3. Fixed Initial Fan Mode

For the first 30 seconds after operation starts, the mode is fixed at the initial mode which was calculated from the relationship between the outdoor air temperature and the outdoor unit horsepower.
If the outdoor unit horsepower changes dramatically, the initial mode may be recalculated and may be again fixed for 30 seconds.

8-4. Operation after Fixed Initial Fan Mode

After the fixed initial fan mode, the fan mode is increased or decreased according to the operating conditions.

(1) Cooling mode at all indoor units, or else mixed heating/cooling operation when the outdoor unit is functioning as a condenser

(A) Fan mode is increased when the pressure sensor temperature is high, and is decreased when the pressure sensor temperature is low.

* The fan mode is always increased when the pressure sensor temperature is 50℃ or higher.

(B) The fan mode may be decreased when symptoms of insufficient gas are detected at an indoor unit.

(2) Heating mode at all indoor units, or else mixed heating/cooling operation when the outdoor unit is functioning as an evaporator

(A) If the condensation temperature is low, the fan mode is increased at regular intervals.

(B) If the condensation temperature is high, the fan mode is decreased in order to prevent excessive loads.

(C) The fan mode may be increased when the outdoor liquid temperature drops to 7℃ or below.

8-5. Snow Removal Control

(1) When the outdoor air temperature is 10℃ or bel ow, the fan operates for 30 seconds every 2 hours in fan mode 8, even when the outdoor unit is stopped or the heat exchanger is not in use. This control is intended to prevent snow from accumulating on stopped fans. (Because the outdoor air temperature cannot be accurately detected when the unit is stopped, a higher outdoor air temperature is used for the control condition, in order to ensure correct operation.)

(2) If the fan mode becomes 0 during cooling operation, the fan mode is changed to 1.

* This control is predictive control. Use a snowfall sensor as necessary according to the installation conditions.

8-6. When the Compressor Magnet Switch Seizing Alarm Occurs

Because there is the possibility that the high pressure has increased, the fan operates in Max. fan mode.

8-7. Other

This unit includes settings for high static-pressure and for Quiet mode.
For information about these settings, refer to the field application functions.

9. Demand Control

Serial-parallel I/O must be connected in order to perform demand control. The below input is received by serial-parallel I/O, and demand control is performed.

The demand values can be set as needed with this device. For more information, refer to the field application functions.

Demand setting		Control	Demand meaning
Contact 1	Contact 2		
×	×	No control	Operates to maximum capacity.
○	×	Rated current	—
×	○	Operates at up to 70% of rated current	—
○	○	Shutdown state	—

○ : Input present ×: Input not present

* The rated current indicates the current value that is listed in the catalog or similar material. If the capacity of this device is insufficient, the inverter compressor raises its operating frequency in order to maintain capacity. For this reason, it is capable of operating at a current which exceeds the rated current (up to approximately 130%).

10. Indoor Unit Control of the Electronic Control Valve

10-1. Normal Control

(1) Except Type E1

			Position of electronic control valve	
Remote Controller	Mode		Outdoor unit operation	Outdoor unit stopped
Cooling	←	Thermostat ON	Performs SH control in the range of 55 - 480 pulses. *1	—
		Thermostat OFF	20 pulses	20 pulses
Heating	←	Thermostat ON	Performs SC control in the range of 55 - 480 pulses. *2	—
		Thermostat OFF	Returns the liquid refrigerant gradually into the outdoor unit in the range of 55 - 80 pulses.	85 pulses
Auto	Auto. Cooling	Thermostat ON	Performs SH control in the range of 55 - 480 pulses. *1	20 pulses
		Thermostat OFF	20 pulses	20 pulses
	Auto. Heating	Thermostat ON	Performs SC control in the range of 55 - 480 pulses. *2	85 pulses
		Thermostat OFF	Returns the liquid refrigerant gradually into the outdoor unit in the range of 55 - 80 pulses.	85 pulses
Fan	←		20 pulses *3	20 pulses
Stop	←		20 pulses *3	20 pulses

(1) Type E1

			Position of electronic control valve	
Remote Controller	Mode		Outdoor unit operation	Outdoor unit stopped
Cooling	←	Thermostat ON	Performs SH control in the range of 55 - 480 pulses. *1	—
		Thermostat OFF	20 pulses	20 pulses
Heating	←	Thermostat ON	Performs SC control in the range of 55 - 480 pulses. *4	—
		Thermostat OFF	20 pulses	20 pulses
Auto	Auto. Cooling	Thermostat ON	Performs SH control in the range of 55 - 480 pulses. *1	20 pulses
		Thermostat OFF	20 pulses	20 pulses
	Auto. Heating	Thermostat ON	Performs SC control in the range of 55 - 480 pulses. *4	85 pulses
		Thermostat OFF	20 pulses	20 pulses
Fan	←		20 pulses	20 pulses
Stop	←		20 pulses	20 pulses

*1 The SH target value is controlled so that the difference [E3 - E1] can become 2 - 6℃, depending on the operation conditions. However, a decline in the required level may cause the SH target value to increase. Be aware that in this case, the electronic control valve is intended to close and this will be wrongly identified as gas shortages.

*2 The SC target value is controlled so that the difference [pressure temp. sensor E1] can become 5 - 20℃, depending on the operating conditions.

*3 In the case of the common use electronic valve kit and more than one (1) indoor unit in the heating mode within the same electronic valve kit, performs the control of returning the liquid refrigerant gradually into the outdoor unit in the range of 55 - 80 pulses.

*4 The SC target value is controlled so that the difference [pressure temp. sensor - E1] can become 5 - 20℃, depending on the operating conditions. However, if installation is combined with the except type E1, the value is controlled so that the difference [pressure temp. sensor - E1] can become 5 - 40℃.

1

10-2. Special Control

Control	Outdoor heat exchanger mode	Subject indoor units			Position of electronic control valve
		Remote Controller	Mode		
Tube refrigerant oil recovery control	Condenser	All indoor units			Fixed pulse for cooling, according to indoor unit capacity
	Evaporator	All indoor units			480 pulses
Reverse cycle defrost control	Condenser	Stopped			Fixed pulse for cooling, according to indoor unit capacity
		Fan			Fixed pulse for cooling, according to indoor unit capacity
		Cooling	←	Thermostat ON	Fixed pulse for cooling, according to indoor unit capacity
				Thermostat OFF	Fixed pulse for cooling, according to indoor unit capacity However, position is 20 pulses for type E1.
		Heating	←	Thermostat ON	Fixed pulse for cooling, according to indoor unit capacity
				Thermostat OFF	Fixed pulse for cooling, according to indoor unit capacity However, position is 20 pulses for type E1.
		Cooling / Heating	Auto. Cooling	Thermostat ON	Fixed pulse for cooling, according to indoor unit capacity
				Thermostat OFF	Fixed pulse for cooling, according to indoor unit capacity However, position is 20 pulses for type E1.
			Auto. Heating	Thermostat ON	Fixed pulse for cooling, according to indoor unit capacity
				Thermostat OFF	Fixed pulse for cooling, according to indoor unit capacity However, position is 20 pulses for type E1.
Outdoor cycle defrost control	Condenser/ evapolator	Stopped			20 pulses *5
		Fan			20 pulses *5
		Cooling	←	Thermostat ON	Performs SH control in the range of 55 - 480 pulses. *1
				Thermostat OFF	20 pulses
		Heating	←	Thermostat ON	100 pulses
				Thermostat OFF	100 pulses However, position is 20 pulses for type E1.
		Cooling / Heating	Auto. Cooling	Thermostat ON	Performs SH control in the range of 55 - 480 pulses. *1
				Thermostat OFF	20 pulses
			Auto. Heating	Thermostat ON	100 pulses
				Thermostat OFF	100 pulses However, position is 20 pulses for type E1.

*5 In the case of the common use electronic valve kit and more than one (1) indoor unit in the heating mode within the same electronic valve kit, the position becomes 20 pulses.

11. Solenoid Valve Kit Control

This device connects the solenoid valve kit which is used to switch between indoor unit cooling/heating for 3-WAY types.

1. Operation of the except type E1 solenoid valve kit

Remote Controller	Mode		Discharge valve	Intake valve	Balance valve	EP valve (evaporation temp. control valve)
Cooling	←	Thermostat ON	OFF	ON	ON	ON
		Thermostat OFF	OFF	ON	ON	ON
Heating	←	Thermostat ON	ON	OFF	OFF	OFF
		Thermostat OFF	ON	OFF	OFF	OFF
Auto	Auto. Cooling	Thermostat ON	OFF	ON	ON	ON
		Thermostat OFF	OFF	ON	ON	ON
	Auto. Heating	Thermostat ON	ON	OFF	OFF	OFF
		Thermostat OFF	ON	OFF	OFF	OFF
Fan	←		OFF	OFF	ON	OFF
		*1 (Cooling)	OFF	ON	ON	ON
		*2 (Heating)	ON	OFF	OFF	OFF
Stopped	←		OFF	OFF	ON	OFF
		*1 (Cooling)	OFF	ON	ON	ON
		*2 (Heating)	ON	OFF	OFF	OFF

*1: Function when a common use solenoid valve kit is used and there are more than one (1) indoor unit in the cooling mode within the same solenoid valve kit.

*2: Function when a common use solenoid valve kit is used and there are more than one (1) indoor unit in the heating mode within the same solenoid valve kit.

2. Operation of the type E1 solenoid valve kit

Remote Controller	Mode		Discharge valve	Intake valve	Balance valve	EP valve (evaporation temp. control valve)
Cooling	←	Thermostat ON	OFF	ON	ON	ON
		Thermostat OFF	OFF	ON	ON	ON
Heating	←	Thermostat ON	ON	OFF	OFF	OFF
		Thermostat OFF	OFF	OFF	OFF	OFF
Auto	Auto. Cooling	Thermostat ON	OFF	ON	ON	ON
		Thermostat OFF	OFF	ON	ON	ON
	Auto. Heating	Thermostat ON	ON	OFF	OFF	OFF
		Thermostat OFF	OFF	OFF	OFF	OFF
Fan	←		OFF	OFF	ON	OFF
Stopped	←		OFF	OFF	ON	OFF

12. Indoor Special Control

12-1. Switching Control (EC control)

If the settings indicate that an RAP valve kit is present (for type E1, the setting on initial shipment from the factory is “present”), then the thermostat does not turn ON for 3 minutes after the indoor unit operating mode is changed from any mode other than heating (including stopped) to heating with thermostat ON. This is done in order to balance the pressure within the heat exchanger.

* With type E1, this control is activated after defrost control is completed, turning the thermostat OFF for 3 minutes.

12-2. Indoor Unit Thermostat ON/OFF Delay Timer

(1) After the thermostat turns ON at an indoor unit, the thermostat will not be turned OFF by the room temperature thermostat or discharge temperature thermostat for a period of 3 minutes.

However, if the condensation temperature reaches or exceeds the PX temperature, the thermostat turns off in order to prevent overload.

(2) After the thermostat turns OFF at an indoor unit, the thermostat will not turn ON again for a minimum of 3 minutes.

12-3. Indoor Unit Refrigerant Oil Self-Recovery Control

This control is performed periodically only during cooling operation.

(1) At indoor units which are stopped, operating in fan mode, or where the thermostat is OFF, the electronic control valve is opened for 1 – 2 minutes.

(2) At indoor units where the thermostat is ON, the electronic control valve position is opened by 10 pulses from the current position.

13. Discharge Temperature

<Alarm Information>

(1) Discharge temperature protection alarm

This device sets an upper limit discharge temperature of 105℃ for all compressors. When the discharge temperature reaches 105℃, that compressor is stopped and restarted. If the same high discharge condition occurs 4 times, then an alarm occurs.

After a compressor has stopped, that compressor will not operate until the temperature has dropped to or below the start-prohibit temperature.

Discharge temperature protection list

Compressor No.	Compressor 1	Compressor 2	Compressor 3
Type	Inverter	Constant-speed	Constant-speed
Stop temp.	105	105	105
Start-prohibit temp.	90	90	90
Alarm display	P03	P17	P18

(2) Discharge sensor trouble detection control

An alarm occurs if the discharge temperature remains abnormally high when the system has been stopped for 60 minutes.

* In this case, possible causes include sensor failure and compressor overheating caused by an insufficient level of refrigerant.

The alarm also occurs if the sensor temperature is at or above the abnormal temperature (80℃) when 20 minutes have passed after the compressor stopped.

* In this case, it is possible that the discharge temperature from a different outdoor unit is being detected, due to an error in the installation of the discharge thermistor.

Discharge sensor failure list

Compressor No.	Compressor 1	Compressor 2	Compressor 3
Type	Inverter	Constant-speed	Constant-speed
Stop temp.	F04	F05	F22

14. Current Protection

(1) Fan motor

Alarm	Description
P22	Occurs when the fan motor detects overcurrent, or when the motor is locked and does not turn.

(2) Inverter compressor

Alarm	Description
P16	Occurs during ordinary operation when overcurrent (32.5 A) is detected.
P26	Occurs under the same conditions as P16 when the inverter compressor is operating at or above 80 Hz.
P29	Occurs when missing phase or overcurrent (48 A) is detected at inverter compressor start.
H31	Occurs when HIC detects overcurrent (75 A), or when an abnormal high temperature (150 ℃) is reached.

The inverter current includes a primary current and secondary current. The alarm judgment utilizes both currents. Generally, the secondary current is larger that the primary current.

(3) Constant-speed compressor

An alarm occurs when overcurrent or lock current is detected.

List of overcurrent and lock currents

Outdoor unit type	Constant-speed compressor	Overload current [A]	Lock current [A]
8 hp	Compressor 2	12.1	13.7
10 hp	Compressor 2	12.7	14.3
12 hp	Compressor 2	12.7	14.3
14 hp	Compressor 2	12.1	13.7
	Compressor 3	12.1	13.7
16 hp	Compressor 2	12.1	14.3
	Compressor 3	12.7	14.3

List of Alarms

Compressor No.	Compressor 2		Compressor 3	
Detected current	Overcurrent	Lock current	Overcurrent	Lock current
Alarm display	H11	H12	H21	H22

(4) CT circuit detection trouble

	Alarm	Description
Compressor 1 (inverter compressor)	H03	Occurs when an open CT circuit is detected in the inverter compressor.
Compressor 2 (constant-speed compressor)	H13	Occurs when a current value of 1.5 A or less is detected when the constant-speed compressor is operating.
Compressor 3 (constant-speed compressor)	H23	Occurs when a current value of 1.5 A or less is detected when the constant-speed compressor is operating.

If the inverter compressor operating frequency is low, the current value is also low. Therefore this alarm is detected only when the compressor is stopped.

The operating current of the constant-speed compressors is always higher than 1.5 A. Therefore, this alarm occurs as the result of an open circuit or failure.

15. Low Oil Alarm

Ordinary operation is resumed after system oil recovery control is completed. If a stop occurs again as a result of a low oil level, this alarm occurs. This alarm will not occur if system oil recovery control has not already been performed.

However, the alarm may not occur if the outdoor unit where the system oil recovery conditions were met is not the same as the outdoor unit which stopped due to low oil level. In this case, system oil recovery control may be performed again.

Low oil alarm	
Alarm display	H07

16. Pressure Sensor Failure

This system contains 2 types of pressure sensors: a high-pressure sensor and a low-pressure sensor.

(1) High-pressure sensor failure

Identification of a failure caused by a loose or displaced connector is based on the relationship between the pressure detected by the high-pressure sensor and the operation of the high-pressure switch, and on the relationship between the temperature detected by the high-pressure sensor and the various temperature thermistors.

However, when the pressure increases suddenly, the judgment for the high-pressure sensor failure alarm may occur before operation of the high-pressure switch. Therefore, before concluding that there is a failure in the pressure sensor, first verify that the service valve was not accidentally left closed, that there are no blocked circuits, and that there is no leakage of refrigerant into stopped outdoor units. Also check for a difference between the high pressure measured by the manifold gauge and the pressure detected by the pressure sensor.

(2) Low-pressure sensor failure

Identification of a failure caused by a loose or displaced connector is based on the relationship between the temperature detected by the low-pressure sensor and the various temperature thermistors.

Before concluding that a failure has occurred, check for a difference between the low pressure measured by the manifold gauge and the pressure detected by the low-pressure sensor.

	High-pressure sensor failure	**Low-pressure sensor failure**
Alarm display	F16	F17

<Field Application Functions>

17-1. Automatic Backup Operation

This system includes a function for automatic backup operation. An alarm is also displayed to inform the operator that a failure has occurred.

(1) Alarms that result in automatic backup operation

When compressor trouble or fan motor trouble makes emergency continued operation impossible, automatic backup operation mode is engaged. Automatic backup mode is not engaged in cases of communications alarms, automatic reset alarms, and other instances when emergency operation is possible by pressing the remote controller buttons or changing other conditions.

The alarms that result in automatic backup mode are P16, P22, P26, P29, H11, H12, H21, H22 and H31.

(2) Start of automatic backup operation

If the above alarms occur, the alarm is displayed on the control device. Pressing the control device button again starts automatic backup mode.

(3) Operation

[1] When 1 outdoor unit is installed

When 1 compressor has failed, backup operation is possible using the other compressors. However, operation does not occur when the outdoor fan is unable to operate as a result of alarm P22.

[2] When multiple outdoor units are installed

When automatic backup mode is engaged, the outdoor unit where the above alarm occurred stops operating. However, if one or more of the compressors is able to operate, then this outdoor unit operates only when the operation of all outdoor units is required for special control or other system purposes.

(4) Alarm display

If a wired remote controller is present, the ⚠ display blinks during operation.

(5) Canceling automatic backup operation

Repair the outdoor unit where the failure occurred. When repairs are completed, reset the power on outdoor unit No.1.

<Caution>

After automatic backup mode has been engaged, it will not be canceled automatically when the repair of the failed outdoor unit is completed. Automatic backup mode will be canceled only when the power on outdoor unit No.1 is reset. Therefore, after repair work is completed, be sure to check whether or not automatic backup mode has been canceled.

How to check: [1] Use test run or other means to verify that all outdoor units operate continuously.

[2] If a wired remote controller is present, check that the ⚠ display has disappeared.

17-2. Manual Backup

If an alarm that does not result in automatic backup occurs frequently, possible causes include failure (such as refrigerant leakage) of a functional part at an outdoor unit other than the unit where the alarm occurs.

In this case, because the outdoor unit service valve must be closed, backup operation must be performed manually.

(1) Backup operation procedure

[1] Disconnecting the failed outdoor unit

(A) Reduce the number of outdoor units set at outdoor unit No.1 by the number of failed outdoor units. Then turn OFF the power or disconnect the inter-unit communications line at the failed outdoor units.

(B) Close all service valves at the failed outdoor units.

(C) Reset the power at outdoor unit No.1.

[2] Disabling operation of 1 compressor

At the S010 switch on the PCB of the failed outdoor unit, turn ON the switch for the compressor to disable, and turn ON the “backup” switch.

<S010 switch>

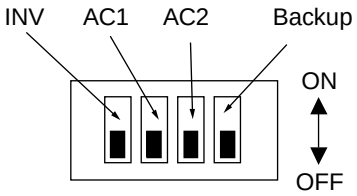

(A) Compressor 1 backup

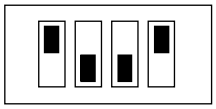

(B) Compressor 2 backup

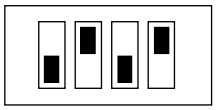

(C) Compressor 3 backup

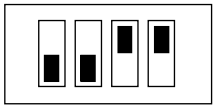

• In order to perform simultaneous backup operation for 2 or more compressors, use a combination of the switch settings shown above.

18. Service Maintenance Functions

The outdoor unit EEPROM settings can be used for the following functions.

18-1. Outdoor Unit Noise Countermeasure: EEPROM 05 (set at each outdoor unit)

This unit includes 3 types of Quiet modes. (However, when they are engaged, operation is in Quiet mode 24 hours a day.) Selecting a Quiet mode results in operation that gives priority to reducing noise. Because these modes involve restrictions on outdoor unit fan modes and the operation frequency, the capacity will be somewhat reduced.

Setting	Max. fan mode	Effect	Amount of capacity reduction
0	14	Normal operation (setting at time of factory shipment)	0
1	12	Noise reduced by approx. 1 – 2 dB from the catalog value.	Approx. 0.5 hp
2	11	Noise reduced by approx. 2 – 3 dB from the catalog value.	Approx. 1.2 hp
3	10	Noise reduced by approx. 5 dB from the catalog value.	Approx. 1.8 hp

* If Quiet mode is set, the capacity will begin to decrease during heating operation at low outdoor temperatures, when the outdoor air temperature is below standard conditions.
* It is possible to set Quiet mode only for nighttime by using the snowfall sensor input terminal and a timer for quiet operation. In this case, operation is the Quiet mode determined by the above setting.

18-2. Slime Countermeasure: EEPROM 0C (set only on the main unit)

This setting controls the operation of the drain pump.

Setting	Description
0	Normal control (setting at time of factory shipment)
1	The drain pump operates for 20 minutes at 2-hour intervals.
2	The drain pump operates for 20 minutes at 20-minute intervals.
3	The drain pump operates constantly.

18-3. Delayed Start for Each System: Outdoor EEPROM 3E (set only on outdoor unit No. 1)

The operation start time can be delayed according to the set system addresses.

This setting reduces the voltage drop by preventing multiple systems from starting at the same time when operation is restarted after multiple operating systems were stopped due to a power outage or other cause.

Setting	Effect
0	No delayed start (setting at time of factory shipment)
1	Start begins after [1 second × System address]
2	Start begins after [2 seconds × System address]
3	Start begins after [3 seconds × System address]

18-4. Automatic Backup: Outdoor EEPROM 48 (set only on outdoor unit No. 1)

Automatic backup is set to occur at the time the unit is shipped from the factory. However, the automatic backup function can be disabled by changing this setting to 1.

18-5. Automatic Backup Mode: Outdoor EEPROM 49 (set only on outdoor unit No. 1)

Two types of automatic backup modes (when multiple outdoor units are installed) can be selected.

Setting	Operation	Condition
0	Backup outdoor units operate only during special control.	Setting at time of factory shipment
1	Only the backup compressors remain stopped. Other OK compressors installed in the same outdoor unit operate as normal.	

* Even when “1” is set, the outdoor unit will remain stopped if all of the compressors in the outdoor unit have failed.

* If only 1 outdoor unit is installed, the operation is according to setting “1” even if “0” is set.

18-6. Snowfall Input Switching: Outdoor EEPROM 4A (set at each outdoor unit)

The snowfall sensor input terminal on the outdoor unit PCB is used for input from the snowfall sensor. It is also possible to connect an external timer and use it to enable nighttime Quiet mode operation.

Setting	Operation
0	Used for snowfall sensor input (setting at time of factory shipment).
1	Used for Quiet mode input.

18-7. Optional Solenoid Valve Control Operation Setting: Outdoor EEPROM C0 (set at each outdoor unit)

Setting	Operation
0	No output (setting at time of factory shipment)
1	Refrigerant shut-off valve control (for cooling when the outdoor air temperature is below standard conditions)
2	—
3	External liquid valve control (used in special cases when the discharge gas temperature is likely to especially rise)

18-8. High Static Pressure Mode: Outdoor EEPROM 8F (set at each outdoor unit)

This product can be made compatible with high static pressure by changing the settings.

By changing the setting item 8F to “6,” this product can be made compatibly.

18-9. Compressor operating sequence: Outdoor EEPROM 49 (set at outdoor units which include CCU functions)

When this setting is set to “1,” the compressors start in sequence beginning from the No. 1 outdoor unit. (The setting is “0” at the time of shipment. With this setting, compressors with lower operating time are started first in order to balance the compressor operating times.)

18-10. Demand value setting: Outdoor EEPROM 1A, 1B (set at outdoor units that include CCU functions)

Demand setting		Control	Demand meaning
Contact 1	Contact 2		
×	×	No limit	Operates to maximum capacity.
○	×	Demand can be set from 40 – 130% at EEPROM 1A.	Current is limited to the set values.
×	○	Demand can be set from 40 – 130% at EEPROM 1B.	Current is limited to the set values.
○	○	Remains stopped.	

18-11. Control function of indoor unit's alarm for communication error

When the remote controller is switched on, the alarm for communication error occurs even if only one (1) indoor unit is powered off.
The following setting can make the alarm for communication error not occur in case of only one indoor unit powered off with the remote controller switched on.

Change the outdoor EEPROM setting item code 23 (setting at each outdoor unit) into "1".

*1 Although this setting is made, other indoor units will continue operating.

*2 Although this setting is made, the alarm [E06] occurs when more than two (2) indoor units are powered off.

19-1. Snowfall Sensor Functions: Outdoor EEPROM 04

A unit identified as having a snowfall sensor attached will periodically send a signal indicating the snowfall sensor input status to all outdoor units in the same system (or all wired outdoor units in the case of linked systems). It is therefore unnecessary to install and wire multiple snowfall sensors.

(1) Snowfall sensor settings

Setting	Operation
0	Sensor input not present. Control is performed. (Setting at time of factory shipment)
1	Sensor input present. Control is performed.
2	Sensor input not present. Control is not performed.
3	Sensor input present. Control is not performed.

* If the snowfall sensor is used, then depending on the circumstances it is necessary to make the correct setting at all outdoor units in the system.
* If “control is not performed” is set, control by the above signal is ignored. This setting is used in order to conserve energy at outdoor units that include a snowfall-protection hood.
  Recommended: If a low-speed fan mode is required (for all-year cooling or other reasons), install a snowfall-protection hood and set this setting to ON.

(2) Control operation

[1] Outdoor units where “sensor input present” is set send the snowfall sensor input information every 10 minutes to all linked systems if the system wiring is linked.

[2] At systems where “control is performed” is set, the above information is used to control operation of the outdoor fan.

[3] At systems where “control is not performed” is set, the snowfall sensor input and above information ignored, and the outdoor fan does not operate.

[4] In the case of a 3-WAY SYSTEM, control can be performed when snowfall sensor input is connected to any outdoor unit.

<Caution>

Snowfall sensor input information is detected once every 10 minutes. Therefore, the outdoor fan may continue operating for up to 10 minutes even when there is no snowfall sensor input.

In addition, the outdoor fan may remain stopped for up to 10 minutes when snowfall sensor input is present.

19-2. Function for Automatic Judgment of Insufficient Refrigerant Gas and Overcharge

This system includes a simple function for judging the level of refrigerant. However, be aware that false judgments may occur if the control elements of the outdoor unit or indoor unit fail.

(1) Starting refrigerant level judgment mode

Short-circuit the CHECK pin on the No. 1 outdoor for 4 seconds or longer to engage this mode. (The LED on the outdoor unit PCB begins blinking.)

(2) Conditions for refrigerant level judgment

After judgment mode starts, judgment occurs when all outdoor units in the system have been operating continuously for 30 minutes or longer.

* Refrigerant level judgment requires that all outdoor units operate continuously for 30 minutes or longer. This is in order to prevent incorrect adjustment of the refrigerant level based on false detection caused by refrigerant accumulation or recovery at stopped outdoor units (stopped due to failures of functional elements). After the judgment is displayed, repeated judgment will occur under new operating conditions if all outdoor units continue operating. Therefore, the judgment display may change when later judgments occur.
* Judgment mode is automatically canceled after 4 hours.

(3) Outdoor unit PCB LED indications in judgment mode

	LED1	LED2	Recommended response
Judgment mode	Blinking	Blinking	
Normal	ON	ON	
Insufficient gas	Blinking	OFF	Charge with refrigerant a little at a time.
Overcharge	OFF	Blinking	Recover refrigerant a little at a time.
Judgment not possible	Blinking alternately		

When judgment mode is not engaged, the LED indicates the normal display (OFF), or else indicates alarms or other information.

If the insufficient gas or overcharge judgment is not stable, then recover refrigerant a little at a time when the overcharge display appears. End refrigerant adjustment when the normal or insufficient gas display appears.

(4) Canceling judgment mode

When judgment mode is cancelled, the LED returns to the standard status display (OFF unless an alarm or other event has occurred).

[1] Automatic cancel

Judgment mode is canceled automatically when 4 hours have passed after it was started.

[2] Forced cancel

Short-circuit the CHECK pin while the judgment mode display is active in order to cancel judgment mode.

<Reference> General Guidelines for Insufficient Gas and Overcharge

Judgment in automatic judgment mode can be problematic in some cases. Therefore, the following guidelines are provided for general judgment of the refrigerant amount.

• Symptoms of insufficient gas

Cooling operation	There is an indoor unit where the position of the electronic control valve is much higher (open by 300 pulses or more) than it was at start, and the difference [E3 – E1] at that indoor unit is large (15℃ or more).
Heating operation	There is an outdoor unit where the position of the electronic control valve is much higher (open by 300 pulses or more) than it was at start, and the difference [Liquid temp. – Gas temp.] at that outdoor unit is large (15℃ or more).

• Symptoms of overcharge

Cooling operation	The high-pressure sensor temperature is 57℃ or hig her, and the difference [Pressure sensor temp. – Liquid temp.] at that outdoor unit is large (15℃ or more).
Heating operation	There is an indoor unit where the position of the electronic control valve is much higher (open by 300 pulses or more) than it was at start, and the difference [Pressure sensor temp. – E3] at that indoor unit is large (25℃ or more).

These are only guidelines, therefore the judgment may vary depending on the installation conditions, load characteristics, and other elements.

2. OUTDOOR UNIT REPAIR PROCEDURES

1. Removing Panels **2**-2
2. Removing Electrical Component Box and Duct **2**-3
3. Discharging Compressor Oil **2**-5
4. Backup Operation **2**-6
5. Recovering Refrigerant **2**-9
6. Checking for Leakage After Repair **2**-14
7. Evacuating System **2**-15
8. Charging Compressor Oil **2**-16
9. Pumping Out Refrigerant from Outdoor Unit **2**-20
10. Compressor **2**-23
11. High and Low Pressure Sensors **2**-38
12. Replacing 4-way valve **2**-39

1. Removing Panels

Procedures:

1. Removing Panels
2. Removing Electrical Component Box and Duct
3. Discharging Compressor Oil
4. Backup Operation
5. Recovering Refrigerant
6. Checking for Leakage After Repair
7. Evacuating System
8. Charging Compressor Oil
9. Pumping Out Refrigerant from Outdoor Unit (when repairing parts other than compressor)
10. Compressor
11. High and Low Pressure Sensors
12. Replacing 4-way valve

(1) Front panel removal (Fig. 1)

- Remove the front panel (remove 11 screws).

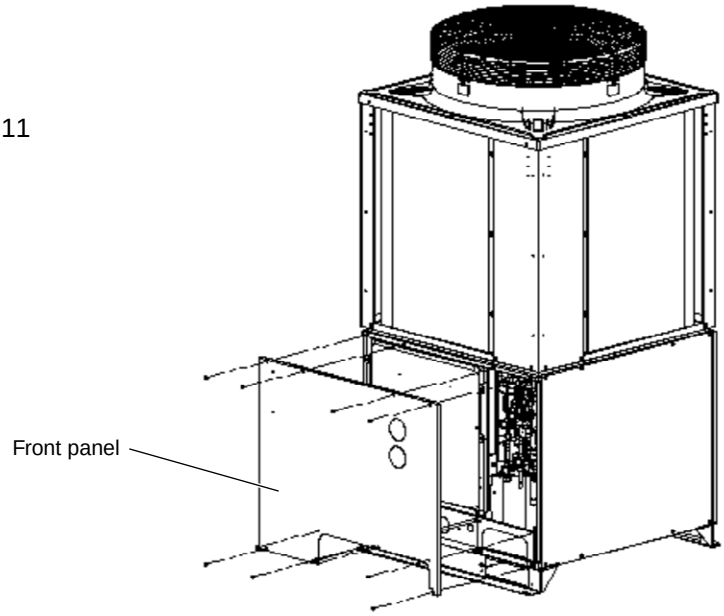

Fig. 1

(2) Power outlet panel & valve cover removal (Fig. 2)

- Remove the power outlet panel (remove 2 screws).
- Remove the valve cover (remove 2 screws).

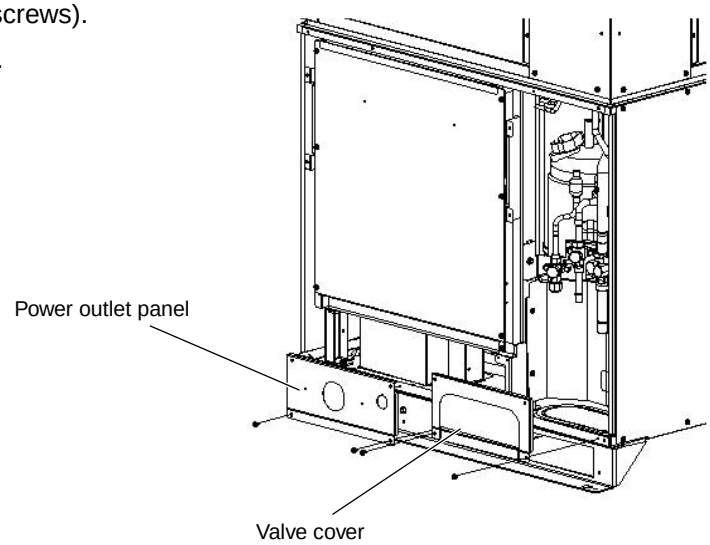

Fig. 2

2. Removing Electrical Component Box and Duct

Be sure to turn off the power before removing the electrical component box. Then check that the power LED (D53) on the control PCB of the outdoor unit is not lit.

(1) Remove the electrical component box cover (remove 6 screws). (Fig. 3)

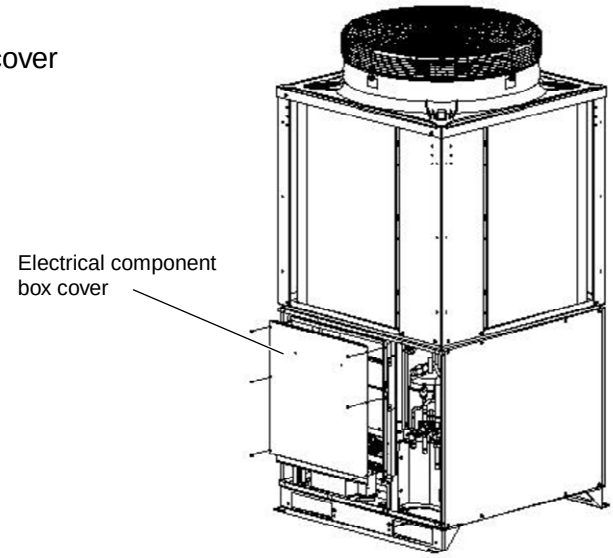

Fig. 3

(2) Remove power and control wires from terminals.

(3) Remove internal wires with extended connectors on the outdoor control PCB. (Solenoid valves, thermistors, crankcase heaters and others)

(4) Disconnect power lines connected to the secondary terminals of the magnetic contactor for the compressor.

(5) Remove the electrical component box (remove 2 screws). (Fig. 4)

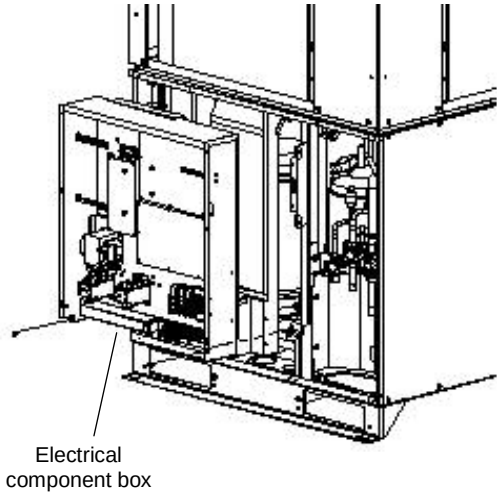

Fig. 4

CAUTION

Be sure to release the locking mechanism before disconnecting each connector.

(6) Remove the center duct. (Fig. 5)
※ The center duct is fitted into the upper and lower ducts and held in place by the electrical component box, an arrangement that makes possible independent removal of the center duct.

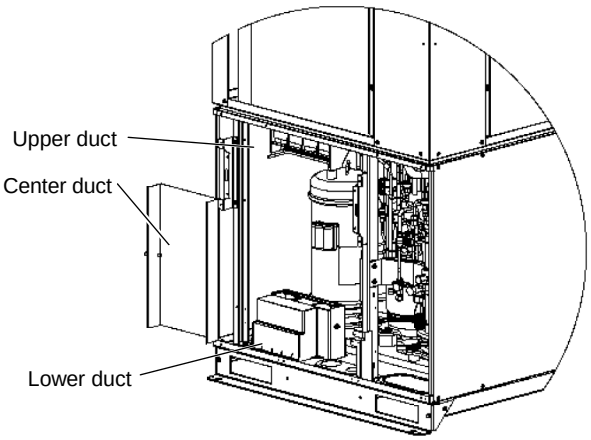

Fig. 5

(7) Remove the lower duct. (2 screws, 1 tab) (Fig. 5-1)

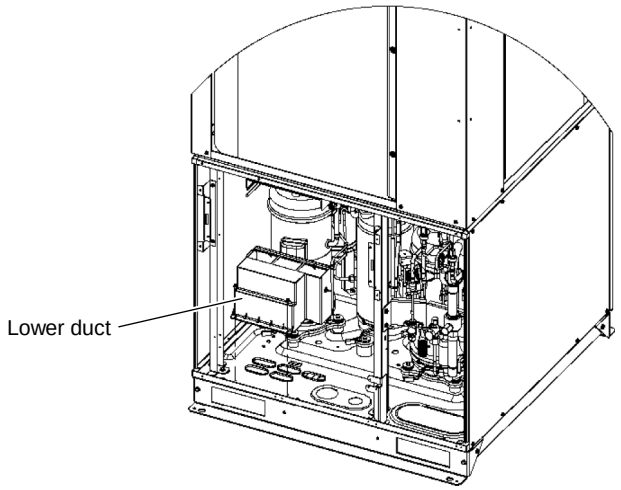

Fig. 5-1

(8) Remove the upper duct. (3 screws) (Fig. 5-2)

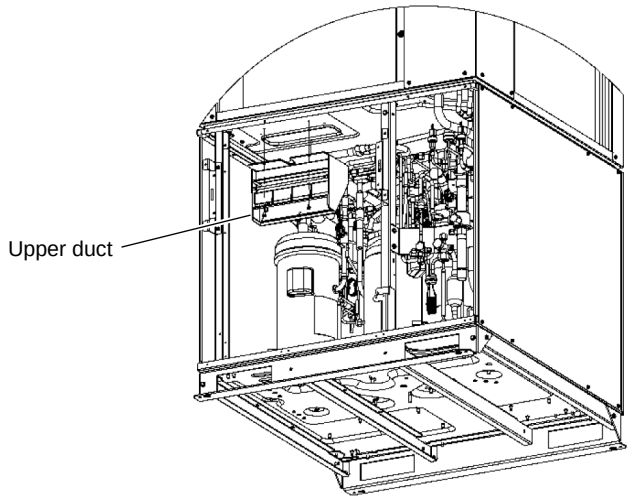

Fig. 5-2

3. Discharging Compressor Oil

Discharged oil can be used for checking the condition of the system. Based on the appearance and color of the discharged oil, a judgment can be made on whether the system is operating normally or not.

3-1. Discharging Oil from Oil Separator

Recover the refrigerant from the outdoor unit following the procedure given in “5. Recovering Refrigerant.” Install hoses as indicated on the equipment and feed nitrogen gas gradually to provide pressure to the system from the low-pressure outlet and collect oil in a pan or container. (Fig. 6)

CAUTION

- **The low-pressure outlet port is at the Lo side of the right side.**
- **A faulty outdoor unit may remain pressurized. The oil delivery port employs a Schrader-type push-to-release valve. Be careful to avoid accidental oil release when using the port.**

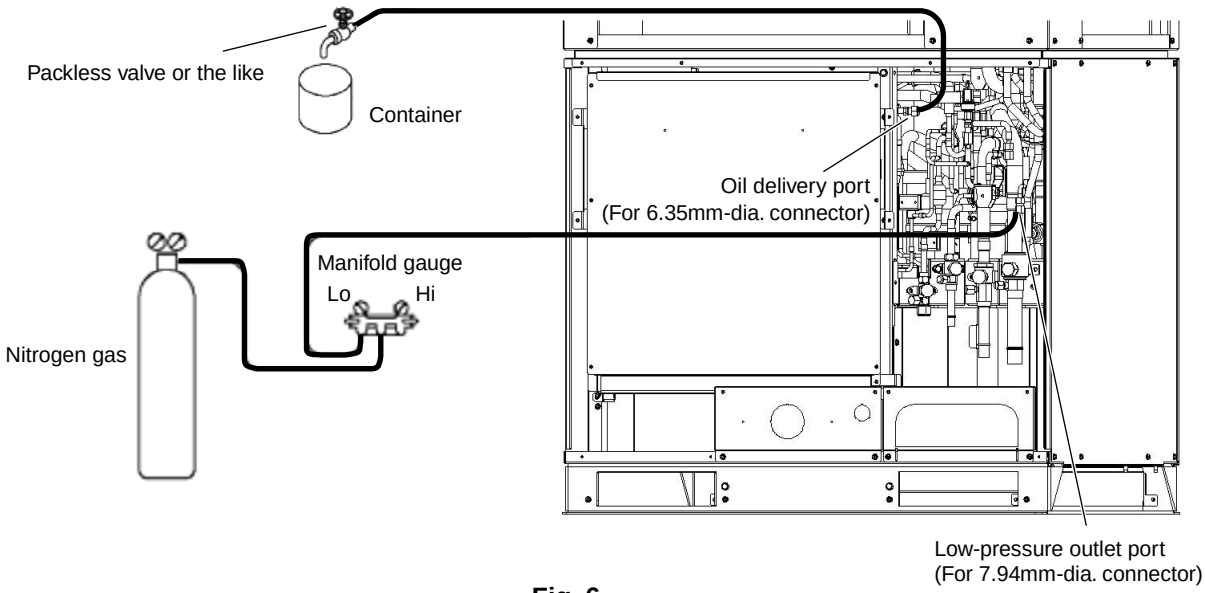

Fig. 6

3-2. Discharging Oil in Compressor

Recover the refrigerant in the outdoor unit following the procedures in “5. Recovering Refrigerant.” Remove the compressor and discharge the oil in it. Refer to “10. Compressor” for detailed procedures.

3-3. Checking the Oil

Acceptance/rejection criteria for the oil

Condition of refrigeration cycle	Condition of oil		Judgment criteria for changing oil*	
	Color	Odor	Total acid value	Hue
Normal	Yellowish	None	0.02 or less	3.5 or less
Abnormal overheat operation	Brownish	Smells somewhat (not as strong as below)	0.06 or over	4.0 or over
			Changing the oil and system cleaning with dry-cores are necessary.	
Motor burnout	Brownish / blackish	Pungent / burnt odor	Changing the oil and system cleaning with dry-cores are necessary.	

* It is difficult to measure the total acid value in the field, therefore oil hue and odor are the rule of thumb. Checking for carbon deposits and abrasive metal powder can additionally be used to assess the system condition.

4. Backup Operation

This system includes an emergency automatic backup function that allows the A/C to operate during the period after trouble occurs until repairs are made. However, during repair and at other times, use manual backup operation.

4-1. Automatic Backup

For details, refer to the control functions section.

After the alarm details are sent to the control device, control for automatic backup operation begins when the ON/OFF button of the wired remote controller is pressed again (operation is started after the alarm is cleared). During this operating mode, “CHECK” flashes on the wired remote controller only to inform the user that operation is in backup mode. However this is not displayed on any other control devices.

- In order to cancel automatic backup mode, it is necessary to reset the power on the control PCB of the outdoor unit where the outdoor unit No. setting (S007) on the control PCB is set to No. 1 (main unit).

CAUTION **If the power is not reset on the control PCB of the No. 1 outdoor unit (main unit), backup mode operation will continue after the repairs are completed.**

Backup operation is intended as emergency operation until repairs are made. Have repairs made as soon as possible.

4-2. Manual Backup

This backup operation is the conventional method of backup operation. It involves disconnecting the failed outdoor unit from the system, and operating only the normal outdoor units.

4-2-1. Backup operation by disconnecting the outdoor unit

(1) Changing the outdoor unit control PCB settings

<If the failed outdoor unit is not the No. 1 unit>

- Settings at No. 1 unit (main unit)

Switch on outdoor unit control PCB	Action
System address (S003, S002)	No change
No. of indoor units (S005, S004)	No change
No. of outdoor units (S006)	Subtract the number of failed units from the current setting.
Outdoor unit No. (S007)	No change

- Settings at normal outdoor units other than the No. 1 unit
  No particular changes

- Settings at the failed outdoor unit
  No particular changes
  However, close all service valves (suction tube, discharge tube, liquid tube, balance tube) at the failed outdoor unit, and disconnect the wiring between the outdoor units.

<If the failed unit is the No. 1 outdoor unit (main unit)>

If the No. 1 unit (main unit) has failed, a different outdoor unit must be set as the No. 1 unit (main unit).

- Settings at the failed No. 1 outdoor unit
  - No particular changes
  - However, close all service valves (suction tube, discharge tube, liquid tube, balance tube) at the failed outdoor unit, and disconnect the wiring between the outdoor units (main-sub unit wiring).
- Settings at No. 1 unit (main unit)

Switch on outdoor unit control PCB	Action
System address (S003, S002)	Make the same settings as on the failed No. 1 unit.
No. of indoor units (S005, S004)	Make the same settings as on the failed No. 1 unit.
No. of outdoor units (S006)	Subtract the number of failed units from the current setting.
Outdoor unit No. (S007)	Change to “1.”

To this outdoor unit, connect the inter-unit communication line which was previously connected to the No. 1 unit (main unit).

After recovery work is completed, return the outdoor unit No. setting (now = 1) to the value it was before the failure and repair. If this is not done, there will be duplicated outdoor unit No. settings. In this case an alarm does not occur immediately, however operation may be unstable.
Reconnect the inter-unit communications line to the No. 1 unit.

- Settings at other outdoor units
  No particular changes.

(2) Adjusting the refrigerant for backup operation

During backup operation, all of the service valves on the failed unit are closed. However, if a check of the backup operating conditions shows that the level of gas is low, recover the refrigerant from the failed outdoor unit. If the level of gas is too high, collect refrigerant at the failed outdoor unit.

● Recovering refrigerant

With the normal outdoor units operating, monitor the operating condition and open/close the suction tube service valve on the failed outdoor unit where all the service valves were closed. In this way, recover refrigerant from the failed outdoor unit in order to adjust the amount of refrigerant in the system.
After adjusting the amount of refrigerant, close the suction tube valve at the failed outdoor unit.

● Collecting refrigerant in the failed outdoor unit

- Short-circuit the vacuum application pin (CN102) on the control PCB of the failed outdoor unit where the service valves are closed, then turn the power ON. Also disconnect the wiring between the outdoor units.
- With the normal outdoor units operating, monitor the operating condition and open/close the liquid tube service valve on the failed outdoor unit where all the service valves were closed. In this way, collect refrigerant in the failed outdoor unit in order to adjust the amount of refrigerant in the system.

- After adjusting the amount of refrigerant, turn OFF the power at the failed outdoor unit, release the short-circuit at the vacuum application pin, and close the liquid tube valve at the failed outdoor unit.
  * Refrigerant recovery is not affected by the power status of the failed outdoor unit. However, collecting refrigerant in the failed outdoor unit is affected by whether the power at that outdoor unit can be turned ON. If the power cannot be turned ON, use a refrigerant recovery device and recover the refrigerant into a recovery cylinder in order to adjust the amount of refrigerant in the system.

4-2-2. Backup operation by setting the failed compressor not to operate

Backup operation settings for each compressor

INV compressor	AC1 compressor	AC2 compressor	Setting for backup operation
OK	OK	Failed	DIP switch S010: Turn BACK UP and AC2 ON.
OK	Failed	OK	DIP switch S010: Turn BACK UP and AC1 ON.
OK	Failed	Failed	DIP switch S010: Turn BACK UP, AC1, and AC2 ON.
Failed	OK	OK	DIP switch S010: Turn BACK UP and INV ON.
Failed	OK	Failed	DIP switch S010: Turn BACK UP, INV, and AC2 ON.
Failed	Failed	OK	DIP switch S010: Turn BACK UP, INV, and AC1 ON.

5. Recovering Refrigerant

The following equipment and tools are required:

Jumper wire with clips, adjustable wrench, set of manifold gauge valves specially designed for refrigerant R410A only, vacuum pump, refrigerant recovery unit, pre-purged refrigerant cylinder for recovery, flathead screwdriver, and outdoor unit maintenance remote controller.

5-1. Refrigerant Recovery Procedures (from outdoor unit)

(1) Turn off the power of the outdoor unit beforehand (at power mains).

(2) Fully close each service valve on the suction tube, discharge tube, liquid tube, and the balance tube of the outdoor unit.

(3) Connect the outdoor unit's high-pressure and low-pressure outlet ports with the Hi and Lo sides of the manifold gauge valves using hoses. (Fig. 7)

CAUTION

The remaining refrigerant in the faulty outdoor unit may create internal pressure. Before connecting hoses, be sure to confirm that each of the manifold gauge valves is tightly closed. Note that the connection ports employ Schrader-type push-to-release valves.

(4) Connect the manifold gauge valves, refrigerant recovery unit, and recovery cylinder using hoses. To avoid the entry of air into the refrigerant tubing, carry out this connection work carefully. (Fig. 7)

CAUTION

For detailed procedures such as connecting the refrigerant recovery unit with the recovery cylinder and methods used for recovery, follow the specific instructions that came with the refrigerant recovery unit.

(5) Locate the AP (Air Purge) pins on the control PCB in the faulty outdoor unit and short them using the clips of the jumper wire. Then restore electrical power to the outdoor unit.

CAUTION

By short-circuiting the AP pins, each solenoid valve in the outdoor unit is forcibly opened as soon as power comes on, which releases all remaining refrigerant into the recovery cylinder. Since neglecting this procedure may leave some refrigerant in the system, it is important that you carry out this step.

(6) Carry out refrigerant recovery.

CAUTION

To determine the completion of refrigerant recovery, follow the instructions that came with the refrigerant recovery unit.

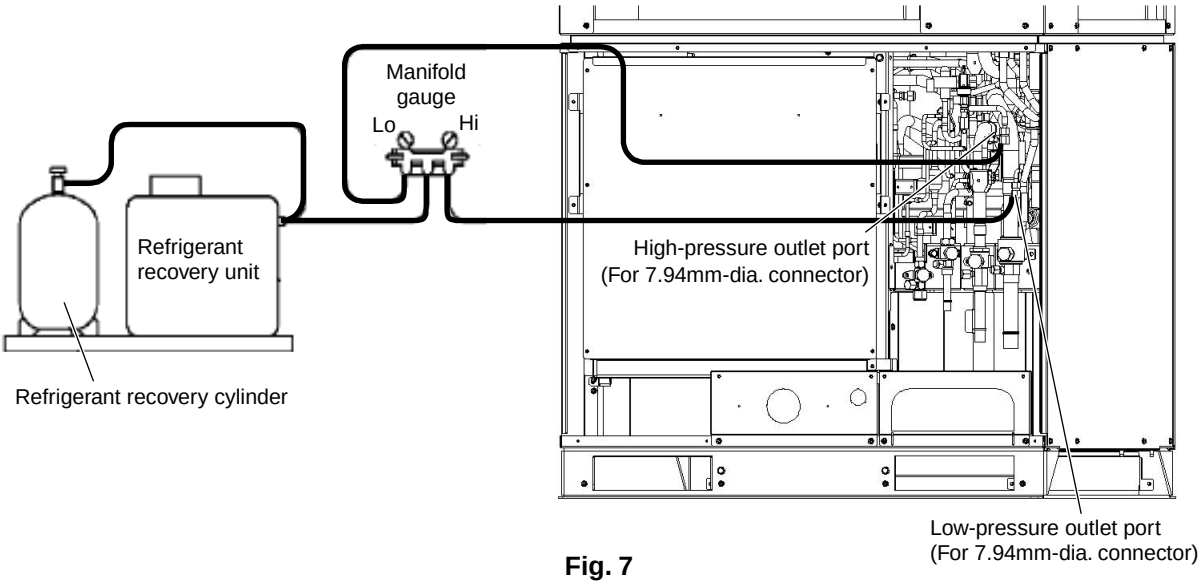

Fig. 7

5-2. Refrigerant Recovery Procedures (Indoor Unit)

The flowchart below shows the refrigerant recovery procedures you must follow when replacing or repairing the indoor unit due to trouble in the refrigerant circuit.

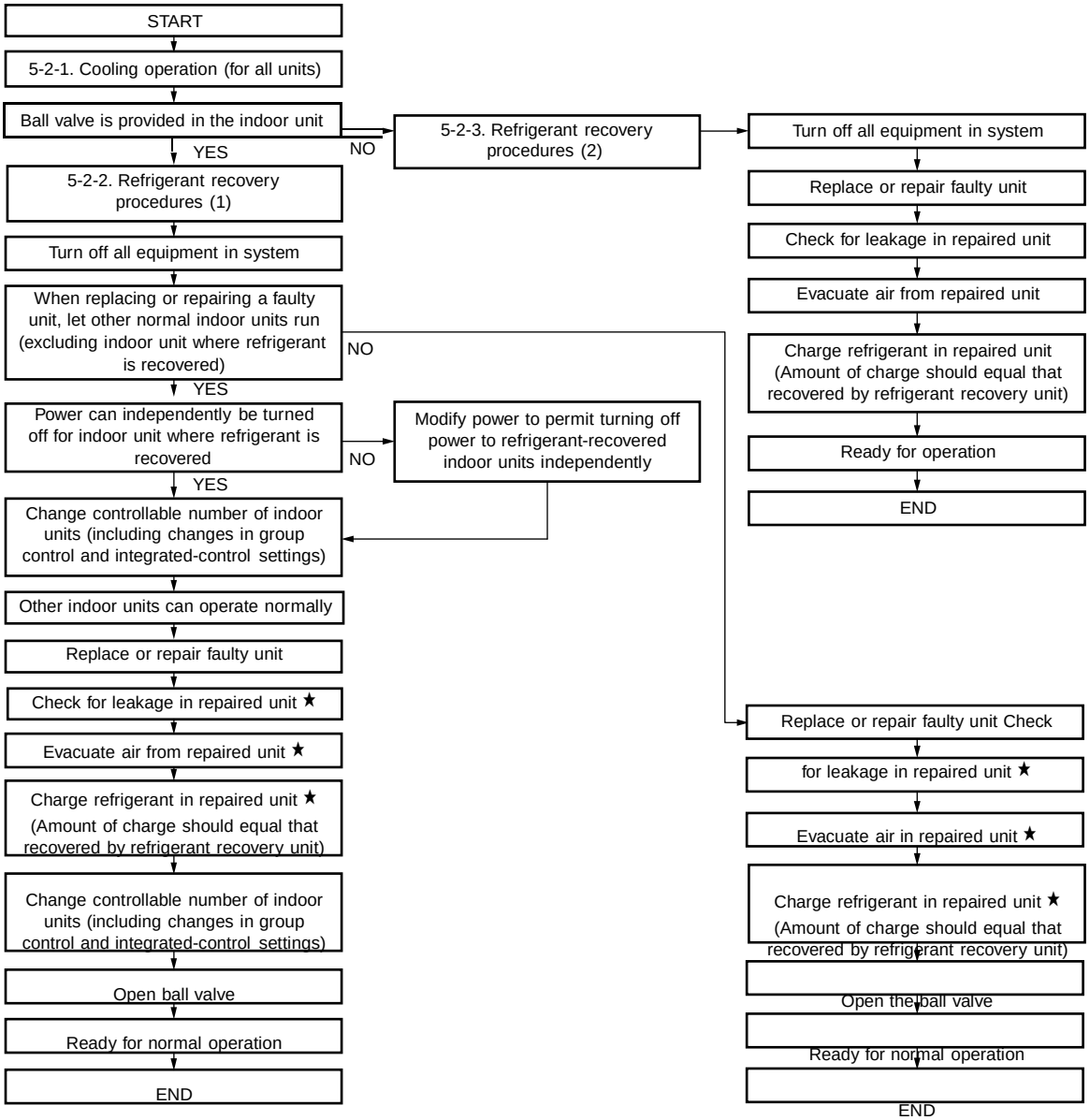

★ Service work performed on indoor units is done simultaneously using the service ports at the liquid (narrow tube) side and the gas (wide tube) side ball valves. Refer to each section in the "Installation Instructions" on refrigerant charging, leak checking, and evacuation procedures.

5-2-1. Cooling operation (for all units)

(1) If the remote controller (CZ-RTC2) is used for maintenance of the outdoor unit

① Connect the outdoor unit maintenance remote controller to the RC connector (CN006) (3P) (BLU) on any one of the outdoor unit control PCBs. Then start a test run of all units. (Press and hold the (CHECK) button for 4 seconds.)

② Press the (MODE) button and change to cooling operation.

CAUTION

Even if the mode that is originally displayed is "Cool," be sure to press the (MODE) button once or more to change to cooling operation. (Pressing the (MODE) button ensures that heating/cooling operation is not mixed and that all units are operating in either Heating or Cooling mode.)

③ Use the remote controller (CZ-RTC2) to check the operating status of the indoor units. Check that all units are operating in Cooling mode.

CAUTION

With the 3-way valve, it is difficult to determine whether operation is heating or cooling by touching the tubing.

(2) If the remote controller (CZ-RTC2) is not available for maintenance of the outdoor unit

①Determine the outdoor unit where the unit No. setting (S007) (3P DIP switch) (BLU) on the outdoor unit control PCB is set to No. 1.

②Short-circuit the mode-change pin (CN101) on the outdoor unit control PCB of the No. 1 unit. Then short-circuit the test-run pin (CN023) to start operation. (Short-circuiting the mode-change pin ensures that heating/cooling operation is not mixed and that all units are operating in either Heating or Cooling mode.)

③Check the displays of the indoor unit remote controllers. Check that all units are operating in Cooling mode. If all units are operating in Heating mode, perform the steps listed below.

CAUTION **With the 3-way valve, it is difficult to determine whether operation is heating or cooling by touching the tubing.**

④Release the short-circuit at the test-run pin (CN023) on the outdoor unit control PCB of the No. 1 unit. Then short-circuit the stop pin (CN104) to stop operation.

⑤Short-circuit the mode-change pin (CN101) on the outdoor unit control PCB of the No. 1 unit.
* Switching of the 4-way valve occurs immediately before operation starts. Therefore it does not change at this time. (Mode change cannot be judged from the sound.)

⑥Short-circuit the test-run pin (CN023) on the outdoor unit control PCB of the No. 1 unit. Then check the displays of the indoor unit remote controllers. Check that all units are operating in Cooling mode.

5-2-2. Refrigerant recovery procedures (1) (using indoor unit ball valve)

(1) If a ball valve with a service port has been provided in the indoor unit as shown in Fig. 8, follow the instructions given in (2) through (6) below. If the service port is instead located in the outdoor side, follow the instructions in "5-2-3. Refrigerant recovery procedures (2)."

(2) After running the unit in Cooling mode for about 5 minutes as described in "5-2-1. Cooling operation (for all units)," fully close the discharge line, the liquid line ball valve, and indoor unit ball valve.

(3) Run the unit in Cooling mode for 10 to 20 minutes more.

(4) Fully close the suction line ball valve, and stop the operation of all units.

(5) Use hoses to connect the manifold gauge valves, refrigerant recovery unit, and refrigerant recovery cylinder with each other. (Fig. 8) Do each connection quickly to prevent air from entering the tubing.

CAUTION **Remaining refrigerant may create internal pressure, therefore care should be taken when connecting the hoses.**

(6) Recover the remaining refrigerant from the indoor unit using the refrigerant recovery unit.

NOTE

To determine completion of refrigerant recovery, follow the instructions that came with the refrigerant recovery unit.

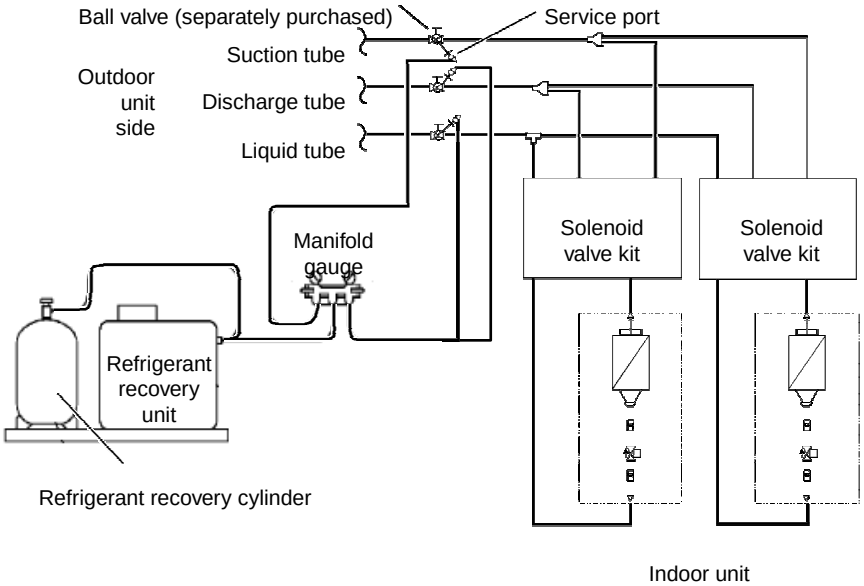

Fig. 8

5-2-3. Refrigerant recovery procedures (2): for indoor unit with no ball valve

Refrigerant in all indoor units and the refrigerant tubing circuit must be pumped into the outdoor unit. The maximum refrigerant storage capacity per a single outdoor unit is approx. 15kg. Thus, in order to collect all refrigerant from the system, a separate refrigerant recovery unit is necessary. Follow these procedures to correctly perform pump down.

Perform work correctly, according to the work procedures given below.

① Connect the manifold gauge to the high- and low-pressure outlet ports on the outdoor unit where pump down will be performed. Be sure that no air enters the tubing at this time.

② Fully close the discharge tube valve on the outdoor unit where pump down will be performed.

③ Follow the instructions in "5-2-1. Cooling operation (for all units)" and operate all units in Cooling mode for approximately 5 minutes. Then fully close the liquid tube valve on the outdoor unit where pump down will be performed.

④ When the high-pressure gauge reaches 2.8 MPa or higher, or the low-pressure gauge reaches 0.5 MPa or below, at the outdoor unit where pump down is being performed, press the ON/OFF button on the outdoor unit maintenance remote controller to stop operation at all units. Then immediately fully close the suction tube valve on the outdoor unit where pump down is being performed.

* If the outdoor unit maintenance remote controller is unavailable, follow the procedure below to stop all of the units.

Pull out the SCT connector (2P) (YEL) (CN231) on the outdoor unit control PCB of the unit where pump down is being performed. When the SCT connector is pulled out, immediately alarm F12 (sensor trouble) occurs and all outdoor units stop operating. Be sure that you do NOT grasp the lead wire when pulling out the connector. Removing any other connector may not cause the units to stop. Therefore be sure to pull out the SCT connector only.

CAUTION **It is not necessary to recover the refrigerant from the balance tube. Therefore do not operate the balance tube valve.**

⑤ Turn off power to all equipment in the system. Then pull out the RC1 connector (4P) (BLU) (CN106) on the outdoor control PCB in the outdoor unit for which pump down has been completed.

* By pulling out the RC1 connector, communication between the main and the sub outdoor units will be isolated.

⑥ Change the setting of controllable outdoor unit numbers (reduce by 1 unit).

* If the setting is incorrect, the E30 alarm (outdoor unit serial communication signal error) occurs and the unit will not operate.

⑦ Turn on power for all equipment in the system and let the remaining outdoor units run in Cooling mode.

⑧ Repeat steps (1) through (7) and complete pump down for all outdoor units.

⑨ Using hoses with Schrader-type push-to-release valves, connect the manifold gauge valves to the suction line service port, the discharge line service port and the liquid line service port in the next outdoor unit to undergo pump down. (Fig. 9)

CAUTION **Remaining refrigerant in the system may cause internal pressure. Check that each valve on the manifold gauge is tightly closed. A Schrader-type push-to-release valve is provided for each connection port.**

⑩ Use hoses to connect the manifold gauge valves, refrigerant recovery unit, and refrigerant recovery cylinder. Quickly connect each part to prevent air from entering the tubing.

⑪ Recover remaining refrigerant from the inter-unit tubing and indoor units using the refrigerant recovery unit.

NOTE

To determine the completion of refrigerant recovery, follow the instructions that came with the refrigerant recovery unit.

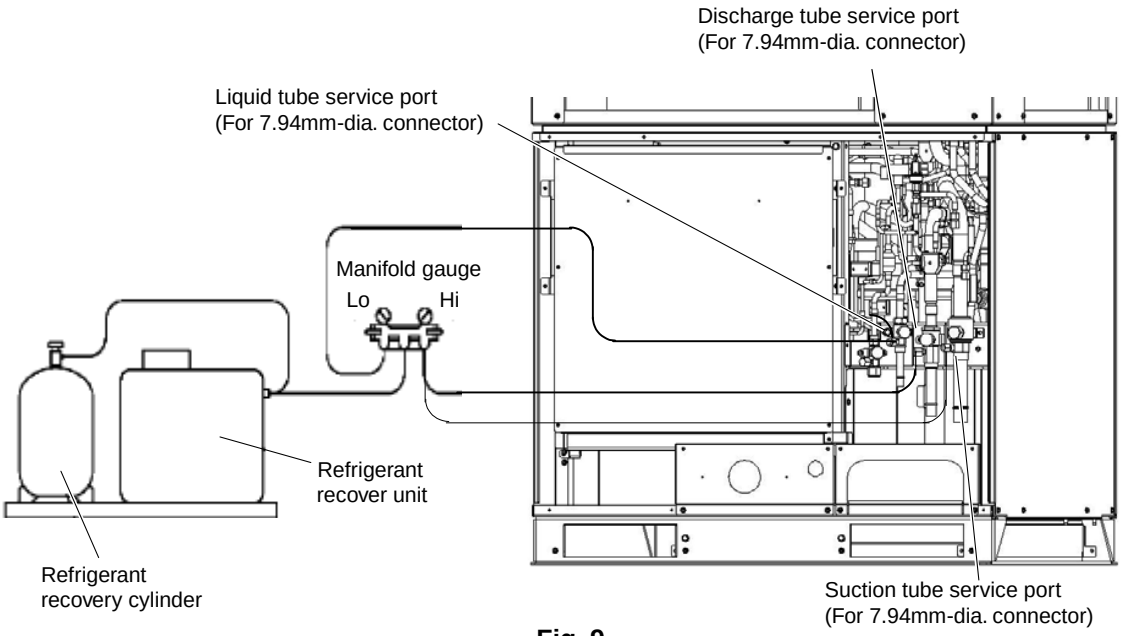

Fig. 9

5-3. Recovery of Refrigerant from Entire System

(1) Turn off power to the entire outdoor system.

(2) Short-circuit the AP (Air Purge) pins (CN102) on the outdoor control PCB of all outdoor units, then supply power to the outdoor units.

* By short-circuiting the AP pins and supplying power to the outdoor units, the solenoid valve in each unit is forcibly opened and all remaining refrigerant can be recovered.

(3) If any unit has encountered a power failure, follow the instructions in “5-1. Refrigerant Recovery Procedures (from Outdoor Units)” and perform refrigerant recovery for the faulty outdoor unit.

(4) Connect the manifold gauge to the high- and low-pressure outlet ports (Schrader-type valves) on any outdoor unit. (Fig. 9)

CAUTION

Remaining refrigerant may cause internal pressure. Check that each valve on the manifold gauge valves is tightly closed. The connection port uses a Schrader-type push-to-release valve.

(5) Connect the manifold gauge valves, refrigerant recovery unit, and refrigerant recovery cylinder. Quickly connect each part to prevent air from entering the tubing.

(6) Check that each service valve of the suction line, discharge line, liquid line, and the balance tube for the outdoor unit has opened, then perform refrigerant recovery.

* If only a single outdoor unit is installed, the balance tube is not used. Therefore, leave this valve closed.

NOTE

To determine the completion of refrigerant recovery, follow the instructions that came with the refrigerant recovery unit.

6. Checking for Leakage After Repair

6-1. Pressure Check for Leakage of Outdoor Unit

After completing repair of the outdoor unit, carry out the following leakage check.

(1) Check that all service valves for suction tube, discharge tube, liquid tube, and balance tube in the repaired outdoor unit are fully closed.

(2) Connect the manifold gauge valves to the high- and low-pressure outlet ports of the outdoor unit.

(3) Feed nitrogen gas into the circuit until 3.6 MPa pressure is reached. If it is apparent that the nitrogen gas is not entering the repaired section, interrupt the feeding. Short-circuit the AP pins (CN102) on the outdoor unit control PCB, turn on power to run the outdoor unit, then resume feeding nitrogen.

(4) Apply soapy water to the repaired part (such as a newly welded part), and briefly inspect for any leakage. If there are any leaks, bubbles will show on the tubing surface.

* To continue the air-tight check after the brief leak inspection, turn on power while short-circuiting the AP pins. Again feed nitrogen gas to obtain a system pressure of 3.6 MPa. Then measure both the outdoor ambient temperature and the pressure in the system. Leave the system in this state for 1 full day and night, and again measure the outdoor ambient temperature and pressure (to determine any reduced values). During the inspection, it is recommended that an awning or cover be used to shield the unit in case of rain. If no problem is found, purge all nitrogen from the system.

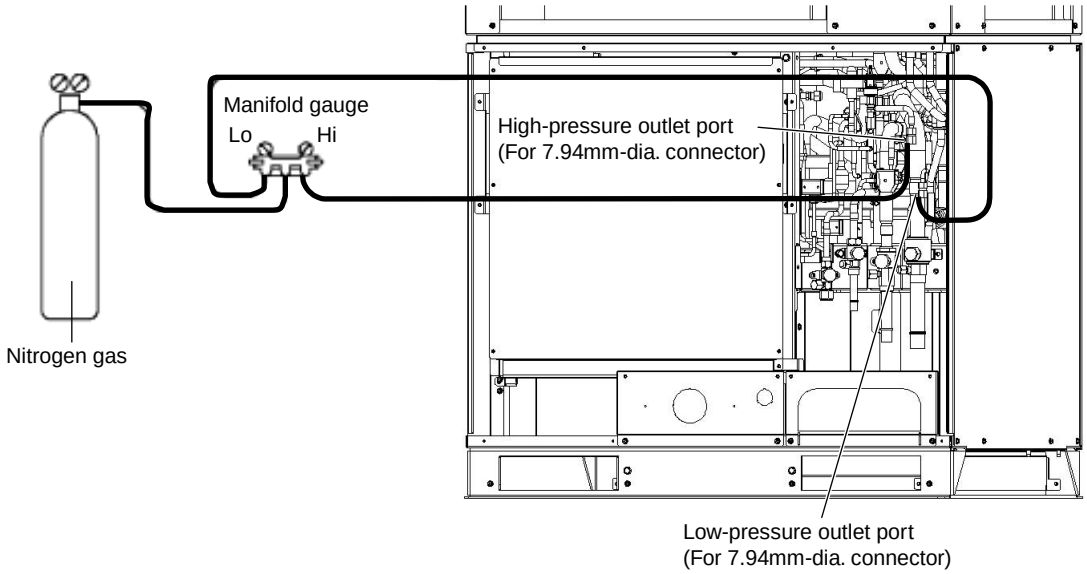

Fig. 10

6-2. Checking for Leakage in Refrigerant Tubing Between Indoor and Outdoor Units

Refer to the “Installation Instructions” that came with the outdoor unit.

7. Evacuating System

This procedure is carried out to ensure there is no remaining refrigerant or other gases (nitrogen, etc.) in the repaired outdoor unit and tubing.

7-1. Evacuating Repaired Outdoor Unit

(1) Check that each service valve of the suction tube, discharge tube, liquid tube, and balance tube in the outdoor unit are fully closed.

(2) Connect the manifold gauge valves to the high-pressure and low-pressure sensor outlets of the outdoor unit. (Fig. 11)

(3) Connect the manifold gauge valves to the vacuum pump.

* If the AP pins (CN102) on the outdoor control PCB have already been short-circuited, step (4) is not necessary.

(4) Turn off power to the repaired outdoor unit and short-circuit the AP (Air Purge) pins on the outdoor control PCB.

CAUTION

By short-circuiting the AP pins and turning on power to the outdoor unit, all electronic valves in the outdoor unit are forcibly opened and any remaining nitrogen gas can be recovered. Failure to perform this procedure may result in nitrogen gas remaining in the refrigerant circuit and causing operating problems. Therefore, never skip this step.

(5) Turn the power ON at the outdoor unit where vacuum will be applied. Then run the vacuum pump and continue evacuation until the vacuum condition falls to less than –101 kPa (–755 mmHg, 5 Torr).

CAUTION

To ensure proper evacuation, refer to the operating instructions that came with the vacuum pump.

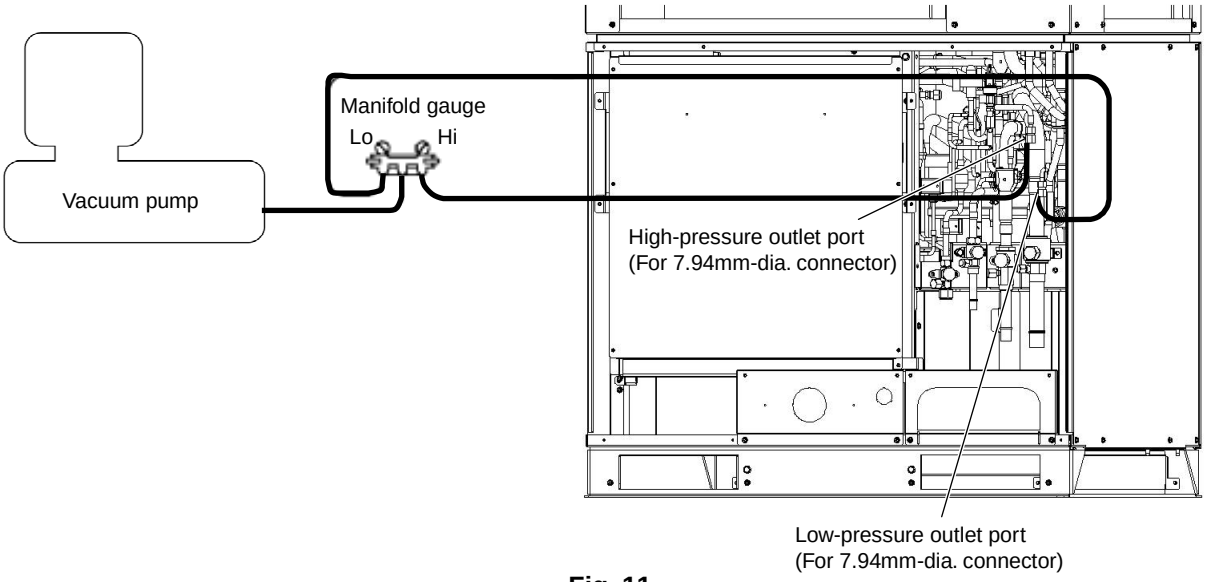

Fig. 11

7-2. Evacuating Refrigerant Tubing Between Indoor and Outdoor Units

Refer to the “Installation Instructions” that came with the outdoor unit.

8. Charging Compressor Oil

8-1. If Refrigerant Has Already Been Charged to Outdoor Unit

Be sure to use an exclusive oil-charging tank for charging compressor oil. Prior to charging, carry out vacuum drying inside the tank and take care that no air (in the form of bubbles) is permitted to enter the tank.

The oil charging procedures are given below.

* The receiver tank used for maintenance may be used as an exclusive oil-charging tank.

When installing the oil-charging tank to the refrigerant system to serve as a safety bypass circuit for refrigerant, connect it to the suction line service port carefully to avoid releasing refrigerant into the atmosphere.

CAUTION

Perform oil charging work carefully so that no liquid refrigerant enters the charging tank.

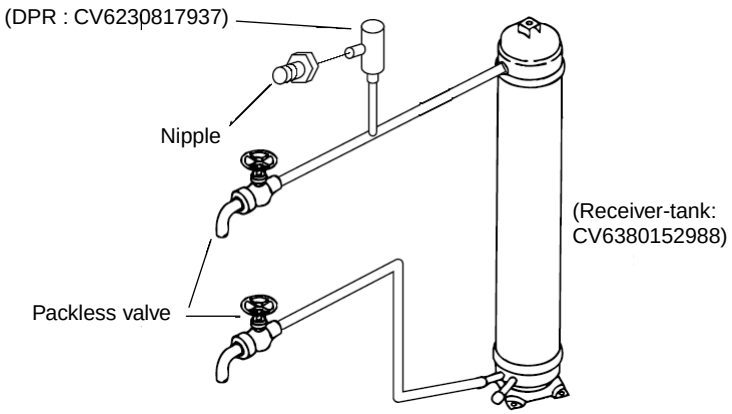

Fig. 12

(1) Evacuation drying in oil-charging tank

With the lower side valve fully closed, open the upper side valve and connect it to the vacuum pump via the manifold gauge valves as shown below. Run the vacuum pump and evacuate the tank until the pressure falls to below –101 kPa (–755 mmHg, 5 Torr) for the evacuation drying. After the evacuation drying is finished, fully close the upper valve. Next, fully close the manifold gauge valves and stop the vacuum pump.

CAUTION

To ensure proper evacuation, refer to the operating instructions that came with the vacuum pump.

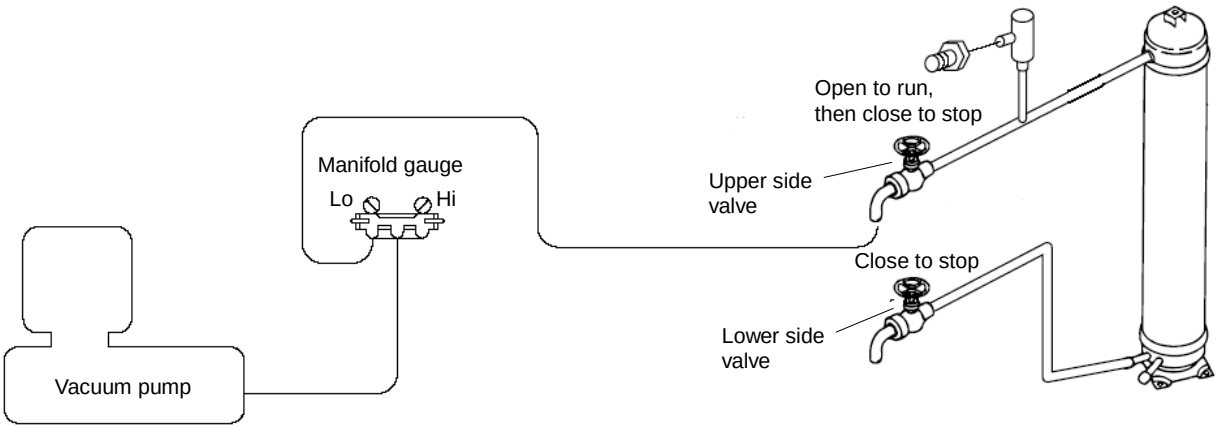

Fig. 13

(2) Charging compressor oil into oil-charging tank

Connect a piece of pipe to the lower valve and then insert the other end deeply into the bottom of the oil container. Make sure you avoid letting any air be sucked into the tube. Next, run the vacuum pump and open the manifold gauge valves, then open the upper and lower valves to begin charging oil into the charging tank.

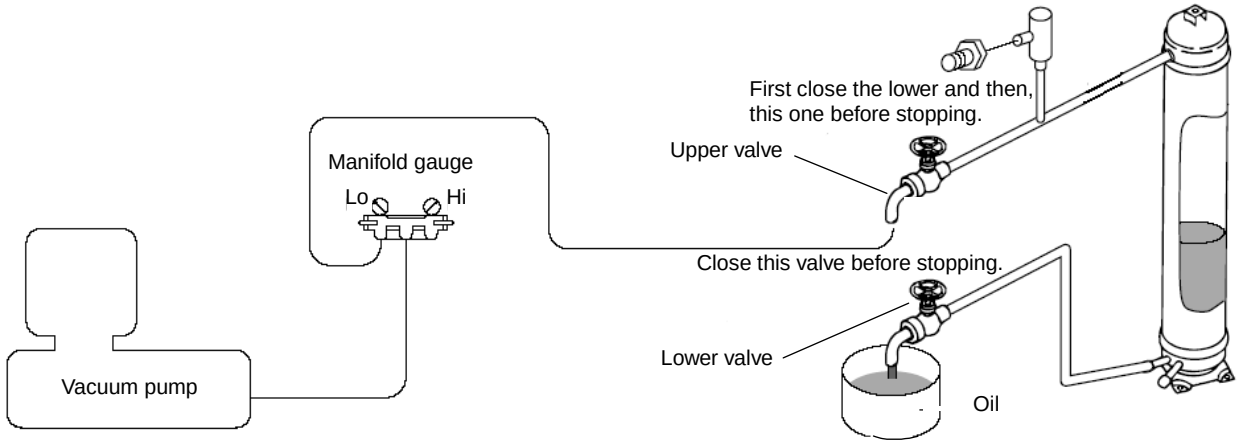

Fig. 14

When the predetermined amount of oil has been charged into the oil-charging tank, immediately close the lower valve and start the vacuum pump to reduce the pressure below -101 kPa (-755 mmHg, 5 Torr). Then close the upper valve and stop the vacuum pump.

CAUTION

Do this operation quickly because compressor oil easily absorbs moisture from the air.

(3) Charging compressor oil into outdoor unit

Connect the lower valve to the low-pressure sensor outlet (with Schrader-type push-to-release valve) in the outdoor unit to be oil-charged, and then connect the high-pressure sensor outlet (with push-to-release valve) to the upper valve via the manifold gauge valves (at Hi-pressure gauge side). In addition, connect the suction line service port (with push-to-release valve) to the DPR (Discharge Pressure Regulator). Carry out the connection work quickly to avoid letting air enter.

CAUTION

- **The hoses may be subject to internal pressure from the refrigerant inside the outdoor unit. A Schrader-type push-to-release valve is provided at each connection port.**
- **Since the DPR valve opens at pressures of 2.5 MPa and above, be sure to connect the DPR to the suction line service port (low-pressure side).**

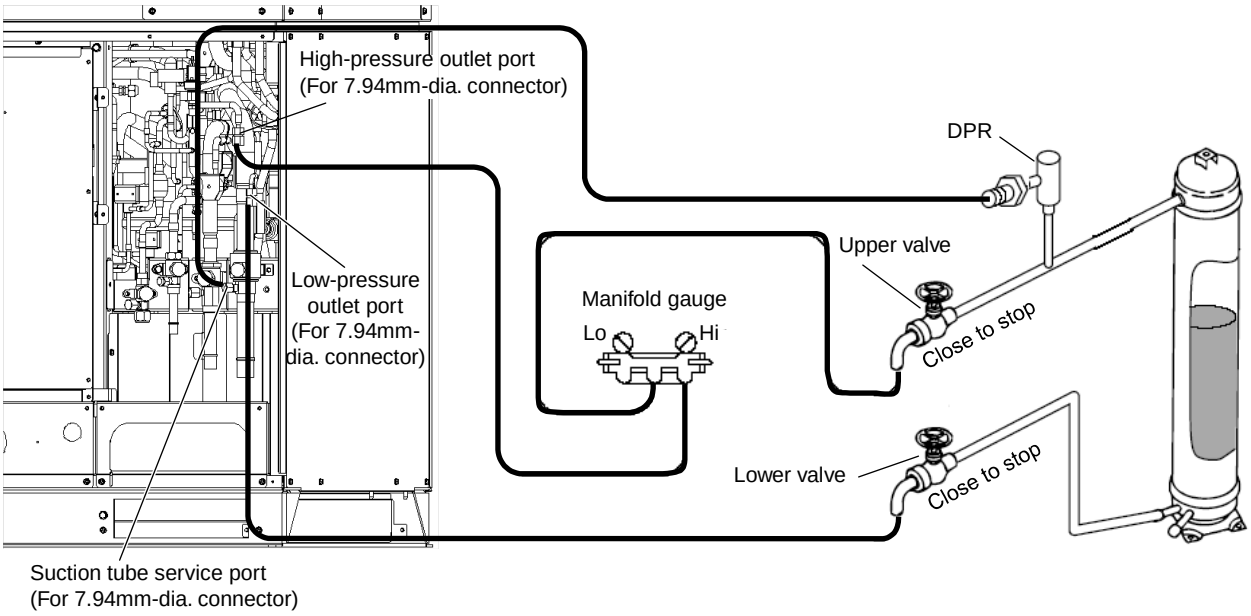

Fig. 15

8. Charging Compressor Oil

Next follow the instructions in “5-2-1. Cooling operation (for all units)” at the outdoor unit where oil will be charged, and start cooling operation at all units. When the operating conditions have stabilized, perform steps 1, 2, and 3 in sequence and open the valves. When this is done, the refrigerant pressure from operation forces the oil out of the oil charge tank, and oil is charged into the outdoor unit from the low-pressure outlet port. From time to time close the upper valve on the top of the oil charge tank (only this valve) and shake the tank to check the amount of remaining oil.

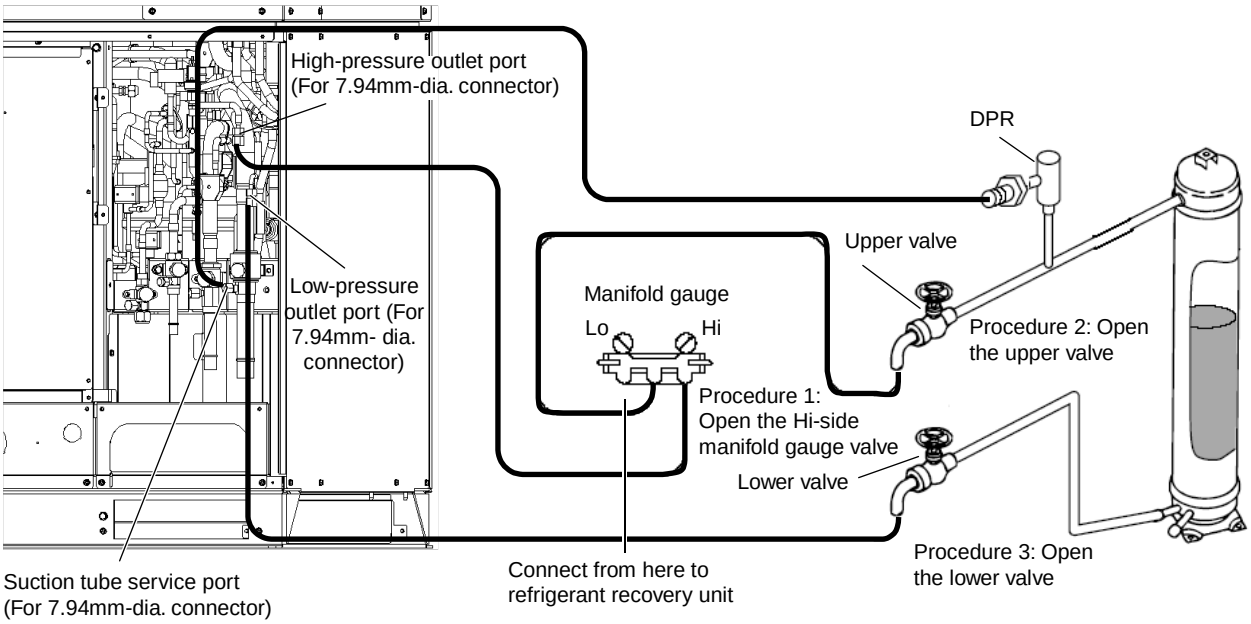

Fig. 16

To terminate the oil charging work, do as follows:

To end the charge process, first close the valve on the high-pressure side of the manifold gauge. Then wait several tens of seconds after the pressure display on the manifold gauge low-pressure gauge stabilizes (in order to equalize the pressure with the low-pressure outlet port and to vaporize the refrigerant in the charge tank). Then perform steps 1 and 3 in sequence and fully close the valves. Finally, connect the refrigerant recovery unit to the Lo-gauge side, shut down all indoor and outdoor units, and then recover the remaining refrigerant in the oil-charging tank, manifold gauge valves, and connecting hoses. Perform these procedures quickly and securely so that no air can enter. After, charge the necessary amount of new refrigerant by referring to the “Installation Instructions” that came with the outdoor unit.

NOTE

To determine the completion of refrigerant recovery, follow the instructions that came with the refrigerant recovery unit.

8-2. If Outdoor Unit Has Not Been Charged with Refrigerant

When a compressor has been replaced or in any other case where the outdoor unit has not been charged with refrigerant, first charge with refrigerant then follow the instructions in “8-1. If Refrigerant Has Already Been Charged to Outdoor Unit” and charge with oil.

Or, alternatively, follow the procedure below.

(1) Connect a tube to the oil outlet port on the outdoor unit to be charged with oil. Insert the other end of the tube into the oil container.

(2) Follow the instructions in “7. Evacuating System,” and apply vacuum to the outdoor unit to be charged with oil. When this is done, oil is charged into the outdoor unit through the oil outlet port.

(3) When the unit has been charged with the designated amount of oil, stop the vacuum pump.

CAUTION **Because oil absorbs moisture readily, this work must be completed quickly.**

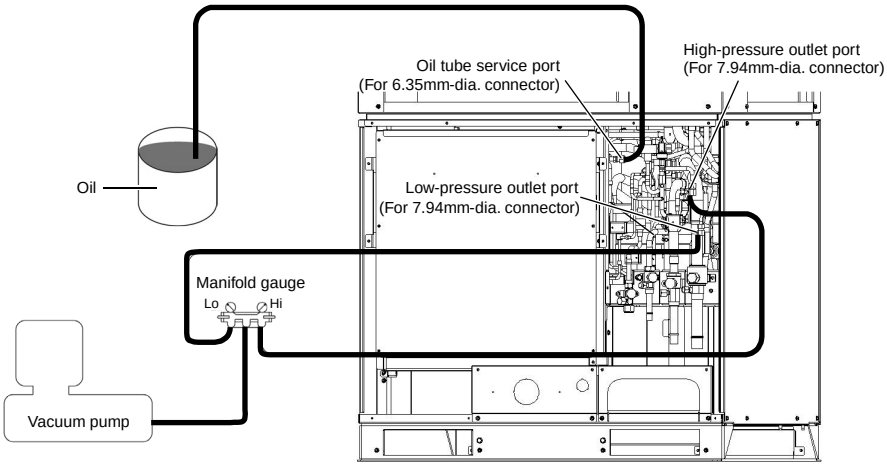

Fig. 17

8-3. Charging Additional Compressor Oil (after replacing compressor)

The rated amount of oil is pre-charged in the compressors as given below:

Model name	Compressor model	Q'ty	Pre-charged amount of oil (liters)
U-8MF1E8	C-9RVN273H0U (Inverter-controlled rotary compressor)	1	1.9
	JT160G-KTYE@SB (Constant-speed scroll compressor)	1	2.1
U-10MF1E8	C-9RVN273H0U (Inverter-controlled rotary compressor)	1	1.9
	JT170G-KTYE@SB (Constant-speed scroll compressor)	1	2.1
U-12MF1E8	C-9RVN273H0U (Inverter-controlled rotary compressor)	1	1.9
	JT170G-KTYE@SB (Constant-speed scroll compressor)	1	2.1
U-14MF1E8	C-9RVN273H0U (Inverter-controlled rotary compressor)	1	1.9
	JT160G-KTYE@SB (Constant-speed scroll compressor)	2	2.1 × 2
U-16MF1E8	C-9RVN273H0U (Inverter-controlled rotary compressor)	1	1.9
	JT170G-KTYE@SB (Constant-speed scroll compressor)	2	2.1 × 2

When replacing a faulty compressor, be sure to first measure the amount of remaining oil in the compressor. Charge additional new oil equal to the difference in the remaining oil and the rated amount as listed above.

For example: Type of replaced compressor: JT170G-KTYE@SB
Remaining oil in the removed compressor: 2.2 ℓ

Additional oil to be charged: 2.2 ℓ (remaining oil in the removed compressor) – 2.1 ℓ (rated oil amount) = 0.1 ℓ

* If the result is a negative amount (remaining oil in the removed compressor is less than the rated amount), it is not necessary to discharge the extra oil from the system.

For the method used for additional oil charging after compressor replacement, refer to "8-1. If Refrigerant Has Already Been Charged to Outdoor Unit."

9. Pumping Out Refrigerant from Outdoor Unit

Required equipment and tools: Jumper wire with clips, adjustable wrench, set of manifold gauge valves, refrigerant recovery unit, pre-purged refrigerant cylinder for recovery, flat-head screwdriver, and outdoor unit maintenance remote controller.

This work is performed in order to collect the refrigerant from an outdoor unit where repairs (other than compressor replacement) will be performed into other outdoor units and indoor units, and the refrigerant tubing.

9-1. If Remote Controller (CZ-RTC2) is Used for Maintenance of Outdoor Unit

(1) Refer to “4. Backup Operation” and perform backup operation.

(2) Connect the manifold gauge valves at the Lo side to the low-pressure outlet port of the outdoor unit to be repaired. Also connect the refrigerant recovery cylinder to any one of the normal outdoor units at the liquid line service port (Schrader-type push-to-release valve). Perform the connection work quickly so that no air is allowed to enter. (Fig. 18)

* Connecting the refrigerant recovery cylinder is done to prevent pressure from rising excessively during backup operation by recovering the refrigerant from the outdoor unit to be repaired.
(Measure the weight of the refrigerant and cylinder itself beforehand and provide sufficient safety measures, such as installing a high-pressure cutout in the circuit.)

CAUTION

The hoses may be subject to internal pressure from the refrigerant inside the outdoor unit. Check that the manifold gauge valves are fully closed beforehand. A Schrader-type push-to-release valve is provided at each connection port.

(3) Connect the outdoor unit maintenance remote controller to the RC connector (CN006) (3P) (BLU) on the outdoor unit control PCB of the outdoor unit to be repaired. Then start a test run of all units. (Press and hold the (CHECK) button for 4 seconds.)

(4) Press the (MODE) button and change to heating operation.

CAUTION

Even if the mode that is originally displayed is “Heat,” be sure to press the (MODE) button once or more to change to heating operation. (Pressing the (MODE) button ensures that heating/cooling operation is not mixed and that all units are operating in either Heating or Cooling mode.)

(5) Use the outdoor unit maintenance remote controller to check the operating status of the indoor units. Check that all units are operating in Heating mode. For details concerning operation of the outdoor unit maintenance remote controller, refer to the “Outdoor unit maintenance remote controller” item.

CAUTION

With the 3-way valve, it is difficult to determine whether operation is heating or cooling by touching the tubing.

(6) Close the suction tube and balance tube on the outdoor unit to be repaired. Then slowly close the liquid tube service valve.

(7) When the low pressure at the outdoor unit to be repaired reaches 0.5 MPa or below, press the ON/OFF button on the outdoor unit maintenance remote controller to stop all the units. Then immediately fully close the discharge tube valve on that outdoor unit.

CAUTION

While closing the valves, the rise in discharge temperature or another factor may cause a protective device to activate, stopping the operation of the outdoor unit. If this occurs, immediately fully close the discharge tube valve on the outdoor unit to be repaired.

(8) Connect the high-pressure gauge side of the manifold gauge to the high-pressure outlet port on the outdoor unit to be repaired, and connect the manifold gauge to the refrigerant recovery device. Be sure that no air enters the tubing at this time.

(9) Short-circuit the vacuum application pin on the outdoor unit control PCB of the unit to be repaired. Then turn ON the outdoor unit power.

CAUTION

When the vacuum application pin is short-circuited and the power is turned ON, all solenoid valves in the outdoor unit are forced open, allowing the refrigerant to be recovered from all tubes which are separated by solenoid valves. If this work is not performed, it will not be possible to recover all of the refrigerant at the refrigerant recovery device. Be sure to perform this step.

(10) Open both Hi- and Lo-side valves on the manifold gauge valves, and recover the refrigerant remaining in the outdoor unit. After that, measure the amount of recovered refrigerant.

NOTE

To determine the completion of refrigerant recovery, follow the instructions that came with the refrigerant recovery unit.

9-2. If Remote Controller (CZ-RTC2) is Not Available for Maintenance of the Outdoor Unit

(1) Refer to “4. Backup Operation” and perform backup operation.

(2) Connect the manifold gauge valves at the Lo side to the low-pressure outlet port of the outdoor unit to be repaired. Also connect the refrigerant recovery cylinder to any one of the normal outdoor units at the liquid line service port (Schrader-type push-to-release valve). Perform the connection work quickly so that no air is allowed to enter. (Fig. 18)

* Connecting the refrigerant recovery cylinder is done to prevent pressure from rising excessively during the backup operation by recovering the refrigerant from the outdoor unit to be repaired.
(Measure the weight of the refrigerant and cylinder itself beforehand and provide sufficient safety measures, such as installing a high-pressure cutout in the circuit.)

CAUTION

The hoses may be subject to internal pressure from the refrigerant inside the outdoor unit. Check that the manifold gauge valves are fully closed beforehand. A Schrader-type push-to-release valve is provided at each connection port.

(3) Determine the outdoor unit where the unit No. setting (S007) (3P DIP switch) (BLU) on the outdoor unit control PCB is set to No. 1.

(4) Short-circuit the mode-change pin (CN101) on the outdoor unit control PCB of the No. 1 unit. Then short-circuit the test-run pin (CN023) to start operation. (Short-circuiting the mode change pin ensures that heating/cooling operation is not mixed and that all units are operating in either Heating or Cooling mode.)

(5) Check the displays of the indoor unit remote controllers. Check that all units are operating in Heating mode. If all units are operating in Cooling mode, perform the steps listed below.

CAUTION

With the 3-way valve, it is difficult to determine whether operation is heating or cooling by touching the tubing.

(6) Release the short-circuit at the test-run pin on the outdoor unit control PCB of the No. 1 unit. Then short-circuit the stop pin (CN104) to stop operation.

(7) Short-circuit the mode-change pin (CN101) on the outdoor unit control PCB of the No. 1 unit.

* Switching of the 4-way valve occurs immediately before operation starts. Therefore it does not change at this time. (Mode change cannot be judged from the sound.)

(8) Short-circuit the test-run pin (CN023) on the outdoor unit control PCB of the No. 1 unit. Then check the displays of the indoor unit remote controllers. Check that all units are operating in Cooling mode.

(9) Close the suction tube and balance tube on the outdoor unit to be repaired. Then slowly close the liquid tube service valve.

9. Pumping Out Refrigerant from Outdoor Unit

(10) When the low pressure at the outdoor unit to be repaired reaches 0.5 MPa or below, pull out the SCT connector (2P) (YEL) (CN231) from the outdoor unit control PCB of that outdoor unit. Then immediately fully close the discharge tube valve on that outdoor unit.
* Pulling out the SCT connector immediately stops all of the outdoor units.

CAUTION

While closing the valves, the rise in discharge temperature or another factor may cause a protective device to activate, stopping the operation of the outdoor unit. If this occurs, immediately fully close the discharge tube valve on the outdoor unit to be repaired.

(11) Connect the high-pressure gauge side of the manifold gauge to the high-pressure outlet port on the outdoor unit to be repaired, and connect the manifold gauge to the refrigerant recovery device. Be sure that no air enters the tubing at this time.

(12) Open both Hi- and Lo-side valves on the manifold gauge valves, and recover the refrigerant remaining in the outdoor unit. After that, measure the amount of recovered refrigerant.

2

NOTE To determine the completion of refrigerant recovery, follow the instructions that came with the refrigerant recovery unit.

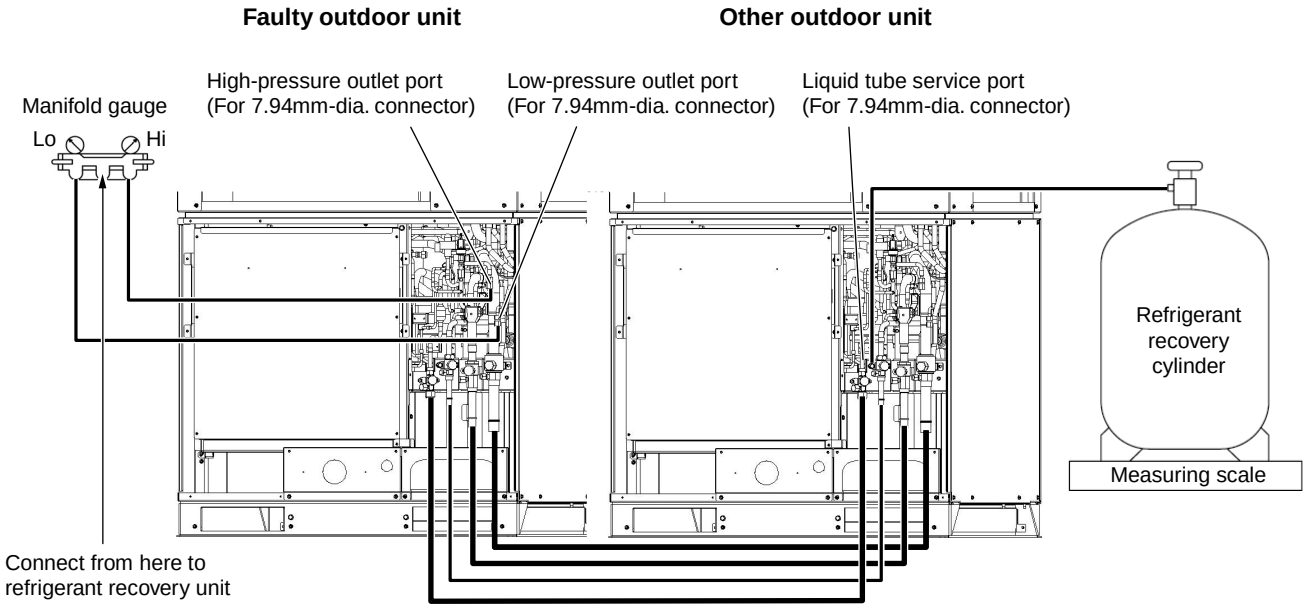

Fig. 18

10-1. Compressor Trouble Diagnosis and Check Methods

Generally, compressor failures can be classified into the following categories.

(1) Mechanical trouble → (A) Locking (intrusion of foreign objects, galling, etc.)
(B) Pressure rise failure (damaged valve, seal, bearing, or other component)
(C) Noise (damaged stator rotor, valve, or other component)

(2) Electrical trouble → (A) Coil burning
(B) Open circuit
(C) Insulation failure
(D) Short circuit

Trouble diagnosis is based on the following remote controller displays: [H03] (Compressor 1: INV compressor, center), [H11] [H12] [H13] (Compressor 2: constant-speed compressor 1, left side when viewed from front), [H21] [H22] [H23] (Compressor 3: constant-speed compressor 2, right side when viewed from front (not present in types 0705, 0905, 1155). A judgment is made based on factors that include the following: coil resistance (varies depending on the compressor), insulation resistance, current, leakage breaker operation, oil and refrigerant fouling, odor, pressure, and noise.

Reference: Insulation resistance (Use a DC 500 V insulation resistance meter and measure the insulation resistance between the electrified and non-electrified parts.)

(a) Motor → Min. 300 MΩ
(b) Compressor → Min. 100 MΩ (servicing part)
(c) Unit → Min. 10 MΩ (This is due to the presence of refrigerant, which decreases the insulation resistance.)

* Minimum insulation resistance as required by generally accepted requirements is 1 MΩ.

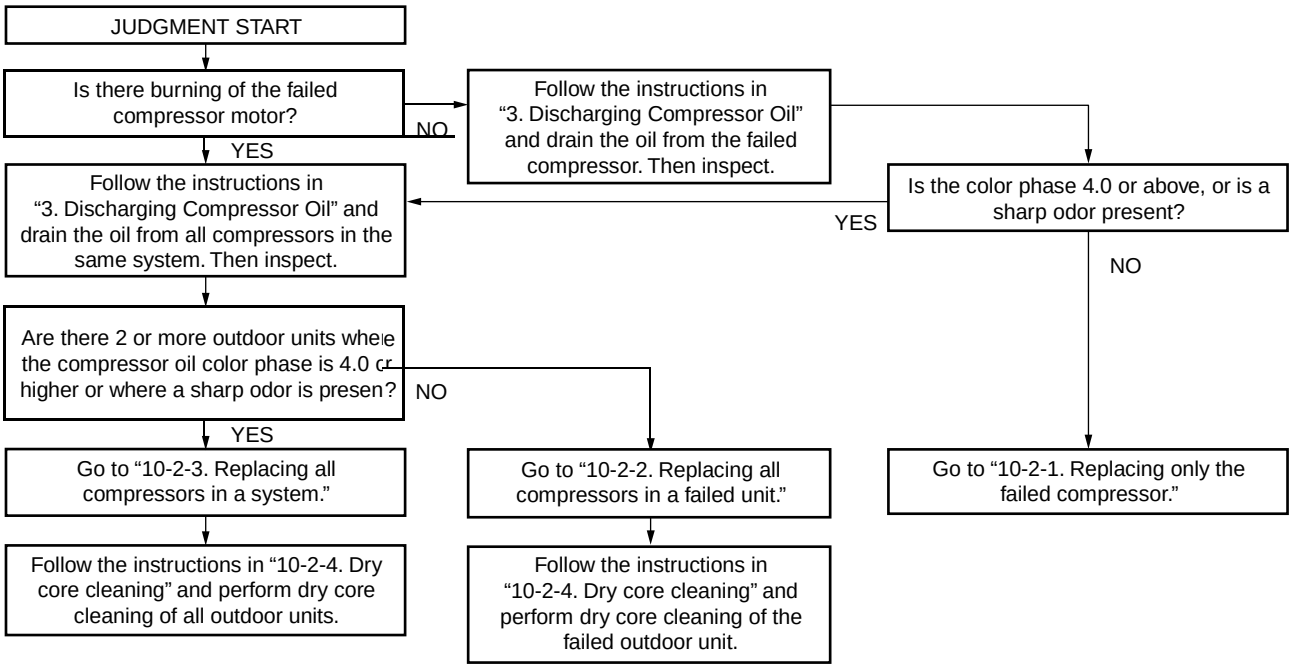

Reference: Symptoms of motor burning

1. Ground fault results in breaker operation.
2. Short circuit results in different coil resistance at different phases.
3. Open circuit

10-2. Replacing the Compressor(s)

10-2-1. Replacing only the failed compressor

(1) If backup operation is required, follow the instructions in “4. Backup Operation” and engage backup operation.

(2) Follow the instructions in “10-3. Removing and Installing Compressors” and replace the failed compressor.

(3) Fully close the high- and low-pressure gauge valves on the manifold gauge, then stop the vacuum pump.

(4) Disconnect the manifold gauge from vacuum pump. Connect the manifold gauge to the cylinder where the refrigerant was recovered. At this time, be careful that air does not enter the tubing.

(5) Open the valve on the refrigerant recovery cylinder and the high-pressure gauge valve on the manifold gauge to charge with refrigerant. At this time, the low-pressure gauge valve on the manifold gauge remains fully closed.

CAUTION

If the recovered refrigerant becomes mixed with another refrigerant or another gas (such as nitrogen or air), do not use the recovered refrigerant for charging. Charge with the designated amount of new refrigerant.

(6) When charging has been completed with an amount of new refrigerant equal to the amount of recovered refrigerant, or when charging with the same amount of new refrigerant has not been completed but no more refrigerant will enter the unit, fully close the high-pressure gauge valve on the manifold gauge. Next, turn the power OFF at the repaired outdoor unit, then remove the short circuit at the AP pin (CN102). Finally, fully open all valves on the suction tube, discharge tube, liquid tube, and balance tube.

(7) If backup operation was engaged, follow the instructions in “4. Backup Operation” and perform backup operation recovery.

(8) If charging with an amount of new refrigerant equal to the amount of recovered refrigerant was not possible, fully close the high-pressure gauge valve on the manifold gauge. Then, while the unit is operating in “5-2-1. Cooling operation (for all units)”, open the low-pressure gauge valve on the manifold gauge and charge with the designated amount of refrigerant.

CAUTION

When charging with liquid refrigerant, add refrigerant a little at a time in order to prevent liquid back-flow.

(9) Fully close the low-pressure gauge valves on the manifold gauge, follow the instructions in “8. Charging Compressor Oil,” and charge with oil if necessary.

(10) Remove the manifold gauge.

CAUTION

The connecting port employs a Schrader-type push-to-release valve. When disconnecting the hose, pressure will be applied from the refrigerant in the outdoor unit.

10-2-2. Replacing all compressors in a failed unit

(1) Follow the instructions in “3. Discharging Compressor Oil” and drain the oil from the oil separator in the failed unit. Measure the amount of drained oil.

(2) If backup operation is required, follow the instructions in “4. Backup Operation” and engage backup operation.

(3) Follow the instructions in “10-3. Removing and Installing Compressors” and replace all compressors in the failed unit.

(4) Fully close the high- and low-pressure gauge valves on the manifold gauge, then stop the vacuum pump.

(5) Disconnect the manifold gauge from the vacuum pump. Connect the manifold gauge to the refrigerant cylinder. At this time, be careful that air does not enter the tubing.

CAUTION **Do not reuse the recovered refrigerant. Use a refrigerant cylinder that contains new refrigerant.**

(6) Open the valve on the refrigerant cylinder, and open the high-pressure gauge valve on the manifold gauge (with the low-pressure gauge valve closed). When charging has been completed with an amount of new refrigerant equal to the amount of recovered refrigerant, or when charging with the same amount of new refrigerant has not been completed but no more refrigerant will enter the unit, fully close the high-pressure gauge valve on the manifold gauge. Next, turn the power OFF at the repaired outdoor unit, then remove the short circuit at the AP pin (CN102). Finally, fully open all valves on the suction tube, discharge tube, liquid tube, and balance tube.

However, leave the balance tube fully closed if only a single outdoor unit is installed.

(7) If backup operation was engaged, follow the instructions in “4. Backup Operation” and perform backup operation recovery.

(8) If charging with an amount of new refrigerant equal to the amount of recovered refrigerant was not possible, fully close the high-pressure gauge valve on the manifold gauge. Then, while the unit is operating according to “5-2-1. Cooling operation (for all units),” open the low-pressure gauge valve on the manifold gauge and charge with the designated amount of refrigerant.

CAUTION **When charging with liquid refrigerant, add refrigerant a little at a time in order to prevent liquid back-flow.**

(9) Fully close the low-pressure gauge valves on the manifold gauge, follow the instructions in “8. Charging Compressor Oil,” and charge with the necessary amount of oil. Also add an amount of oil that is equivalent to the amount that was drained from the oil separator.

(10) Remove the manifold gauge.

CAUTION **The connecting port employs a Schrader-type push-to-release valve. When disconnecting the hose, pressure will be applied from the refrigerant in the outdoor unit.**

(11) Follow the instructions in “10-2-4. Dry core cleaning” and perform dry core cleaning of the outdoor unit that failed.

10-2-3. Replacing all compressors in a system

(1) Follow the instructions in “3. Discharging Compressor Oil” and drain the oil from the oil separators in all outdoor units. Measure the amount of drained oil.

(2) Follow the instructions in “10-3. Removing and Installing Compressors” and replace all compressors in the system.

(3) Follow the instructions in “6. Checking for Leakage After Repair” and check for leaks at all outdoor units and in the tubing.

(4) Follow the instructions in “7. Evacuating System” and apply vacuum to all outdoor units and tubing.

(5) Fully close the high- and low-pressure gauge valves on the manifold gauge, then stop the vacuum pump.

(6) Disconnect the manifold gauge from vacuum pump. Connect the manifold gauge to the refrigerant cylinder. Be especially careful that air does not enter the tubing.

CAUTION **Do not reuse the recovered refrigerant. Use a refrigerant cylinder that contains unused refrigerant.**

(7) Open the valve on the refrigerant cylinder, and open the high-pressure gauge valve on the manifold gauge. When charging has been completed with an amount of new refrigerant equal to the amount of recovered refrigerant, or when charging with the same amount of new refrigerant has not been completed but no more refrigerant will enter the unit, first turn the power OFF at the repaired outdoor unit, then remove the short circuit at the AP pin (CN102). Then fully open all valves on the suction tube, discharge tube, liquid tube, and balance tube. However, leave the balance tube fully closed if only a single outdoor unit is installed.

(8) If backup operation was engaged, follow the instructions in “4. Backup Operation” and perform backup operation recovery.

(9) If charging with an amount of new refrigerant equal to the amount of recovered refrigerant was not possible, fully close the high-pressure gauge valve on the manifold gauge. Then, while the unit is operating in Cooling mode, open the low-pressure gauge valve on the manifold gauge and charge with the designated amount of refrigerant.

CAUTION **When charging with liquid refrigerant, add refrigerant a little at a time in order to prevent liquid back-flow.**

(10) Fully close the low-pressure gauge valves on the manifold gauge, follow the instructions in “8. Charging Compressor Oil,” and charge with the necessary amount of oil. Also add an amount of oil that is equivalent to the amount that was drained from the oil separators.

(11) Remove the manifold gauge.

CAUTION **The connecting port employs a Schrader-type valve. When disconnecting the hose, pressure will be applied from the refrigerant in the outdoor unit.**

(12) Follow the instructions in “10-2-4. Dry core cleaning” and perform dry core cleaning of all outdoor units.

10-2-4. Dry core cleaning

If burning or other failures occur repeatedly at compressors within the same system, in many cases the cause is acid, sludge, carbon, or other substances that remain in the refrigeration cycle as the result of insufficient cleaning.

If, when the oil is inspected, there is an outdoor unit where the oil color phase is 4.0 or higher, or where a sharp odor is present, carry out all steps below to perform dry core cleaning.

(A) If a ball valve is installed on the outdoor unit

(1) Refer to "5-2-1. Cooling operation (for all units)" and operate all outdoor units in either Heating or Cooling mode.

(2) If all units are operated in Cooling mode, close first the liquid tube service valve then the ball valve on all outdoor units where dry cores will be attached.

If all units are operated in Heating mode, close first the ball valve then the liquid tube service valve on all outdoor units where dry cores will be attached.

* This step is performed in order to expel refrigerant from the tubing between the liquid tube service valve and the ball valve. Approximately 4 – 5 seconds is a sufficient interval between closing each of the 2 valves.

(3) Press the ON/OFF button on the outdoor unit maintenance remote controller to stop the operation of all units.

* If the outdoor unit maintenance remote controller is not available, use the following method to stop the operation of all units:

Pull out the SCT connector (2P) (YEL) (CN231) from the outdoor unit control PCB of the unit where pump-down is being performed. When the SCT connector is pulled out, alarm F12 (sensor trouble) immediately occurs and all outdoor units stop operating. Be sure that you do NOT grasp the lead wire when pulling out the connector. Removing any other connector may not cause the units to stop. Therefore be sure to pull out only the SCT connector.

(4) Connect a refrigerant recovery device to the liquid tube service port (Schrader-type valve) of all outdoor units where dry cores will be attached, then recover the refrigerant from the tubing. Be sure that no air enters the tubing at this time.

CAUTION **When the hose is connected, internal pressure is applied by the remaining refrigerant in the inter-unit tubing. The connection port employs a Schrader-type valve. To determine when refrigerant recovery is compete, follow the instructions in the instruction manual of the refrigerant recovery device.**

(5) As shown in Fig. 19, disconnect the tube that runs from the liquid tube valve to the ball valve on all outdoor units where dry cores will be attached. Then attach the dry cores.

(6) At all outdoor units where dry cores are attached, pressurize with 3.3 MPa of nitrogen from the liquid tube service port and check for leaks.

(7) After evacuating all nitrogen gas from the tubing, apply vacuum from the liquid tube service port to all outdoor units where dry cores are attached until the pressure is –101kPa (5 Torr) or less.

(8) Fully open the liquid tube valve and ball valve on all outdoor units where dry cores are attached.

(9) Operate all outdoor units for approximately 3 hours (in either Heating or Cooling mode or mixed Cooling and Heating mode).

(10) Follow the above procedure, and replace all dry cores with new dry cores.

(11) Operate all outdoor units for approximately 20 minutes (in either Heating or Cooling mode or mixed Cooling and Heating mode).

(12) Follow the instructions in "3. Discharging Compressor Oil" and drain a small amount of the oil from the oil separators of all outdoor units where dry cores are attached. Check the color phase, odor, and other characteristics.

(13) If the results show that dry core cleaning is still necessary (for example, a color phase of 4.0 or higher), return to Step 11 and repeat until the results are normal (including a color phase of 3.5 or less).

CAUTION **Perform another dry core replacement after approximately 30 hours of system operation.**

(14) Perform steps (1) – (4), and remove all dry cores. Then connect the tubing between the liquid (narrow) tube valves and the ball valves.

(15) At all outdoor units where dry cores were removed, pressurize with 3.3 MPa of nitrogen from the liquid tube service port and check for leaks.

(16) After evacuating all nitrogen gas from the tubing, apply vacuum to all outdoor units where dry cores were removed until the pressure is –101kPa (5 Torr) or less.

(17) **INSTALLATION:** Refer to the “Information for the Person in Charge of Installation” items. Charge with an amount of refrigerant equal to the amount that was recovered.

(B) If a ball valve is not installed on the outdoor unit

(1) Refer to “Refrigerant recovery procedures (2) for indoor unit with no ball valve” under “5-2. Refrigerant Recovery Procedures (Indoor Unit).” Perform pump down of the refrigerant from all indoor units and inter-unit tubing to the outdoor unit side.

(2) Cut the liquid (narrow) tube at all outdoor units where dry cores will be attached, then attach the dry cores and ball valves as shown in Fig. 19.

(3) For the next steps, refer to (6) – (17) in **(A)** on the previous page.

Cleaning dry core

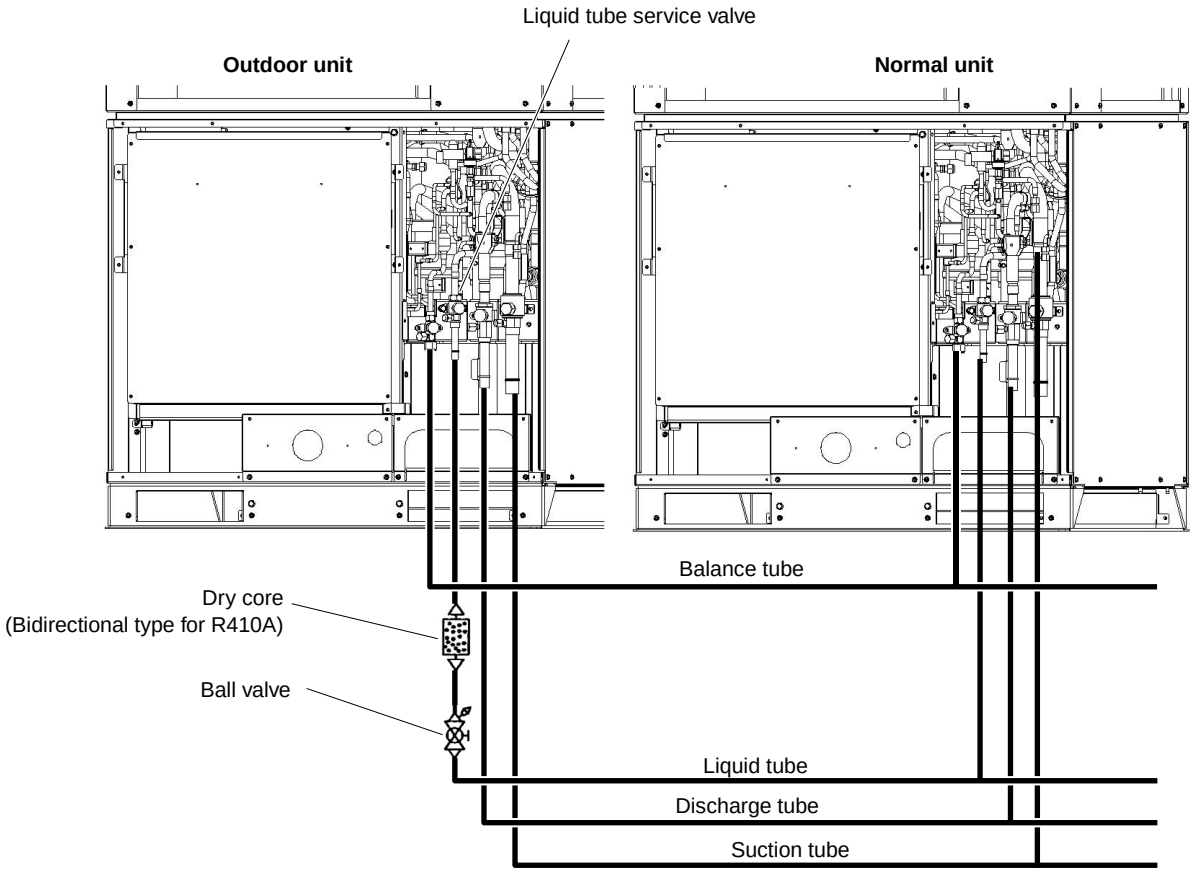

Fig. 19

10-3. Removing and Installing Compressors

When removing and installing compressors, use sufficient caution to ensure that moisture or other substances do not enter the refrigerant tubing system.

10-3-1. Replacing compressors

* For all models U-8MF1E8 – U-16MF1E8, follow the replacement procedure below.

(A) Replacing the inverter compressor (Compressor 1 on remote controller alarm display)

■ Removal

(1) Connect a manifold gauge to the high- and low-pressure outlet ports at the outdoor unit where the compressor will be replaced. Connect the manifold gauge to a nitrogen cylinder and perform nitrogen gas replacement in the outdoor unit tubings.

(2) Follow the instructions in “1. Removing Panels” and “2. Removing Electrical Component Box and Duct” and remove the corresponding parts from the outdoor unit where the compressor will be replaced.

(3) Remove the cap at the compressor terminal plate. Disconnect the power terminal.

(4) Remove the crankcase heater.

(5) Remove the 3 bolts, and remove the washers and rubber washers (quantities indicated in the figure below).

(6) Disconnect the tube-with-flare-nut using two adjustable wrenches. At this time, cover the tube in place with waste cloth while watching out for oil leaks. Then cap the disconnected tube and mount the flare nut on the compressor. Tighten the flare nut with a seal bonnet (1/4") in it.

NOTE If oil remaining in the compressor reaches the equalized oil level, oil will come pouring out when the tube-with-flare-nut is removed.

(7) Prepare to disconnect the 2 brazed locations shown in the figure.

CAUTION **Protect the sensors and the surrounding plates, rubber, lead wires, clamps, and other items. Remove the discharge sensor shown in the figure 20.**

(8) Disconnect the 2 brazed locations shown in the figure below.

(9) Pull the compressor toward you.

CAUTION **When pulling the compressor toward you, be careful not to cause any abnormal deformation of the tube-with-flare-nut.**

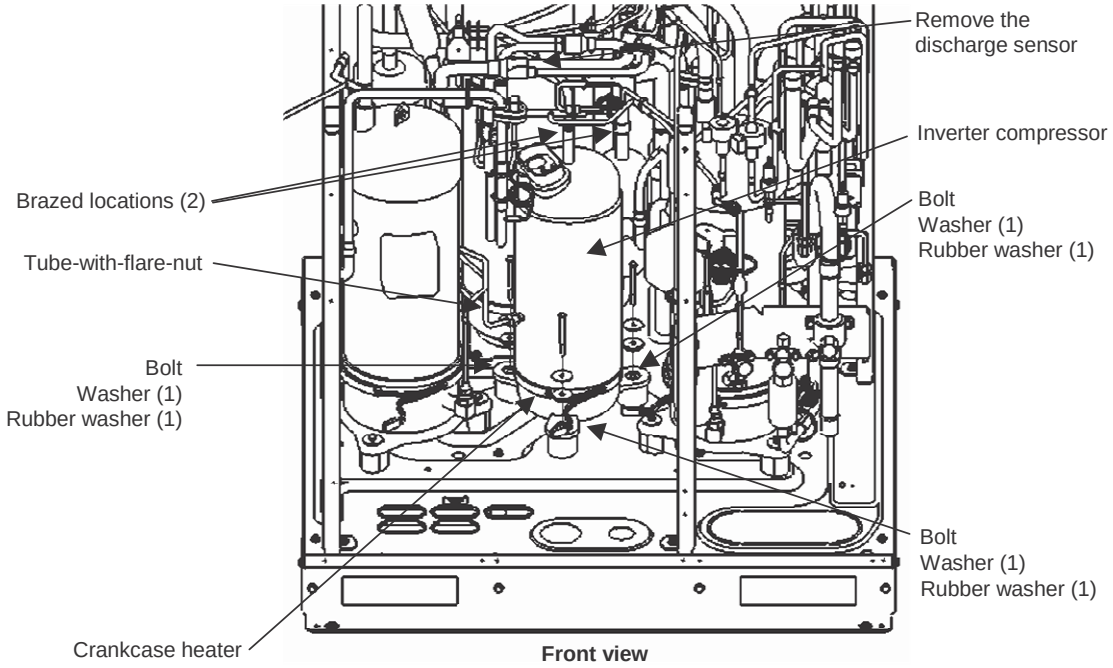

Fig. 20

■Installation

(1) Remove the rubber stopper and tube cap (brazed) from the new compressor.

(2) Install the crankcase heater onto the new compressor.

(3) Place the 2 pieces of cushioning rubber in the designated positions on the compressor.

(4) Place the 2 pieces of cushioning rubber onto the legs of the new compressor.

CAUTION **When setting the compressor into the unit, be careful not to cause any abnormal deformation of the tube-with-flare-nut.**

(5) Place the remaining cushioning rubber onto the new compressor, at the position shown in the figure below.

(6) Remove the bolts that are temporarily fastening the pieces of cushioning rubber (inner 2 legs), and anchor the 3 compressor legs using the bolts, washers, and rubber washers.

(7) Remove the flare nut from the new compressor, and connect the tube-with-flare-nut.

(8) Shape the tubes and insert them at the 2 brazing locations.

(9) Connect a manifold gauge to the high- and low-pressure outlet ports at the outdoor unit where the compressor was replaced. Connect the manifold gauge to a nitrogen cylinder and perform nitrogen gas replacement.

(10) Perform copper brazing at the 2 brazing locations.

(11) Follow the instructions in "6. Checking for Leakage After Repair" and check for leaks at the outdoor unit where the compressor was replaced.

CAUTION **At this time, also check for leaks at the flare nut connection on the tube-with-flare-nut.**

(12) Re-install all components that were removed. Re-install the electrical component box in the same position as it was before.

CAUTION **Be sure to check for looseness of the power terminal connection at the compressor terminal plate, and to check by pulling vertically on the connections. If the terminals become disconnected easily, replace the wiring Assy.**

(13) Follow the instructions in "7. Evacuating System" and apply vacuum to the outdoor unit where the compressor was replaced.

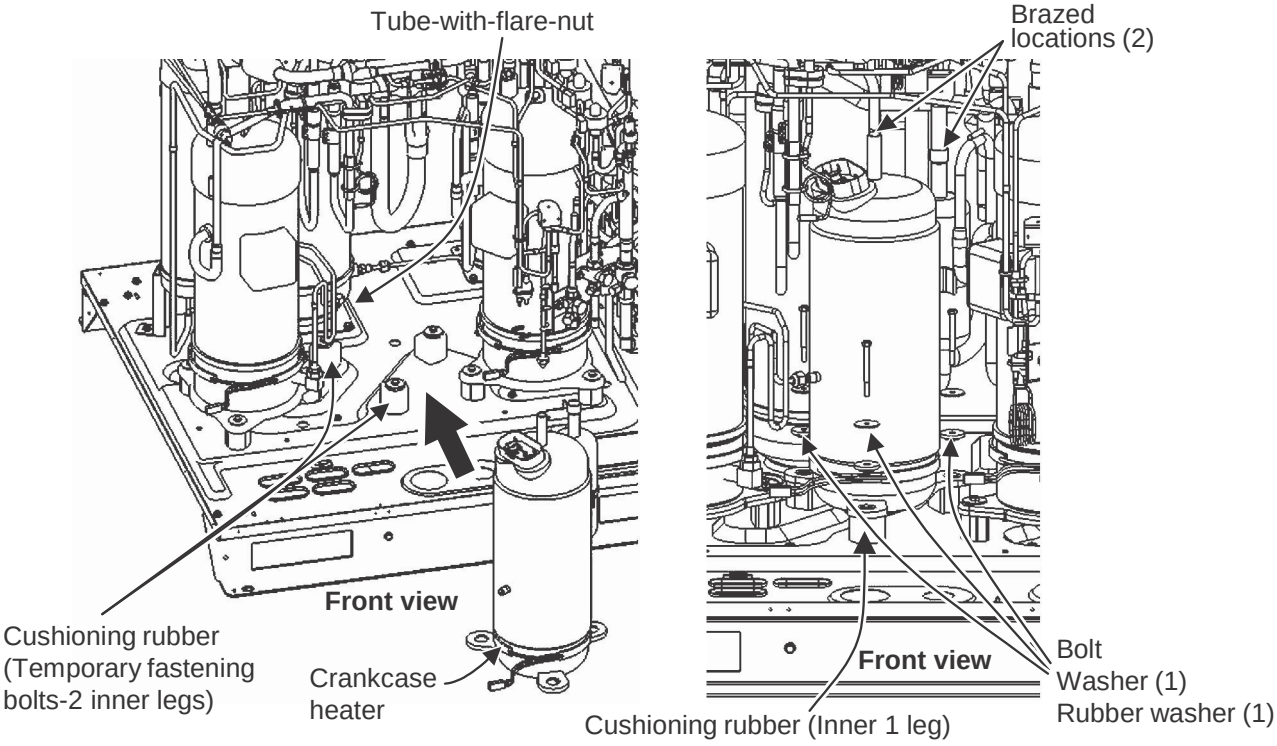

Fig. 21 Fig. 22

(B) Replacing the constant-speed compressor 1 (Compressor 2 on remote controller alarm display)

■ Removal

(1) Connect the manifold gauge to the high- and low-pressure outlet ports at the outdoor unit where the compressor will be replaced. Connect the manifold gauge to a nitrogen cylinder and perform nitrogen gas replacement.

(2) Follow the instructions in “1. Removing Panels” and “2. Removing Electrical Component Box and Duct” and remove the corresponding parts from the outdoor unit where the compressor will be replaced.

(3) Remove the cap at the compressor terminal plate. Disconnect the power terminal.

(4) Remove the crankcase heater.

(5) Remove the bolts(3 locations), washers, and spacers (1 each at the 3 locations shown in the figure).
* The compressor rear leg is not anchored.

(6) Prepare to disconnect the 3 brazed locations shown in the figure.

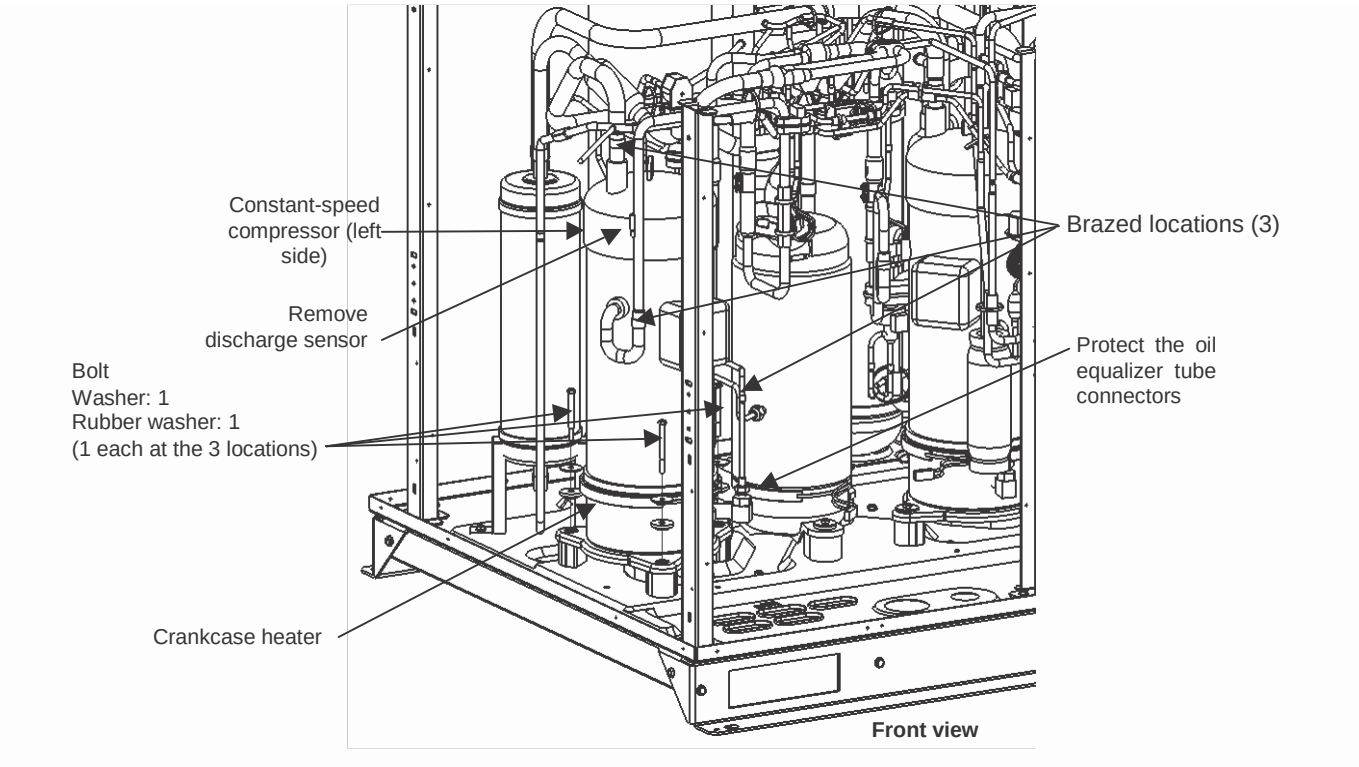

Fig. 23

- **Protect the sensors and surrounding plates, rubber, lead wires, clamps, and other items.**
  Pay particular attention to protection of the oil equalizer tube connector parts, and removal of the discharge sensor.
  An O-ring is mounted inside the oil equalizer tube connector parts. It must be protected and do not lose it.

(7) Disconnect the 3 brazed locations shown in the figure 23.
* First disconnect the ø6.35 tube, then disconnect the ø12.7 and ø22.22 tubes.

(8) Pull the compressor toward you.

■ Installation

(1) Remove the 2 brazed tube caps (2 pieces) from the compressor.

(2) Remove hexagonal caps from the compressor.
* When removing the hexagonal caps, hold the fixing nut at the main unit side so as not to loose it with a wrench or spanner. And then, loosen and remove the hexagonal cap.

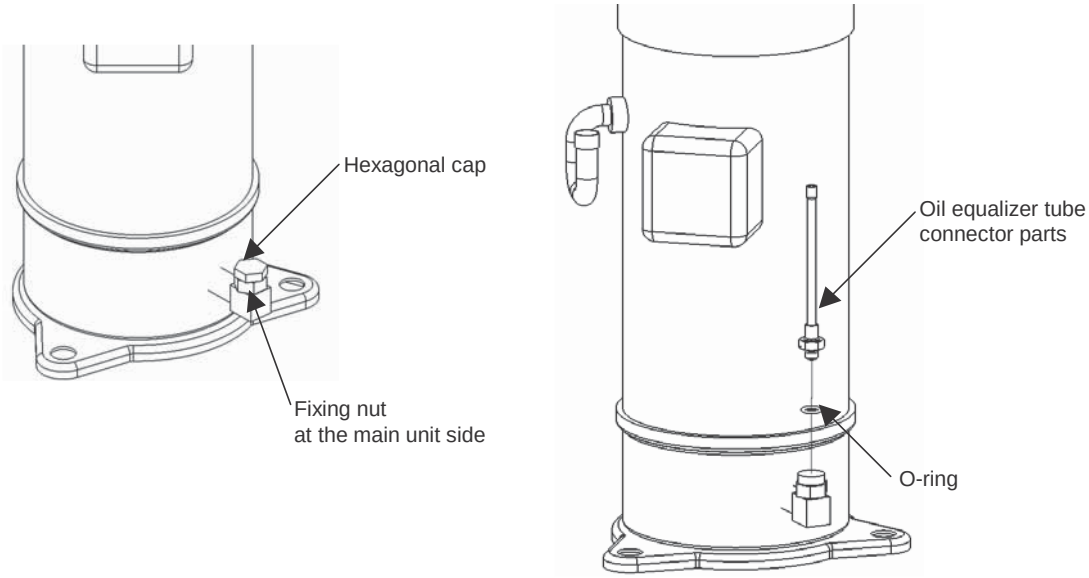

Fig. 24

(3) Remove the oil equalizer tube connector parts along with the O-ring from the removed compressor and mount them on the replaced new compressor.

(4) Install the crankcase heater onto the new compressor.

(5) Temporary mount 2 cushion rubbers with bolts at the position as shown in the figure 25.
Set up the leg of the new compressor onto the 2 cushion rubbers.

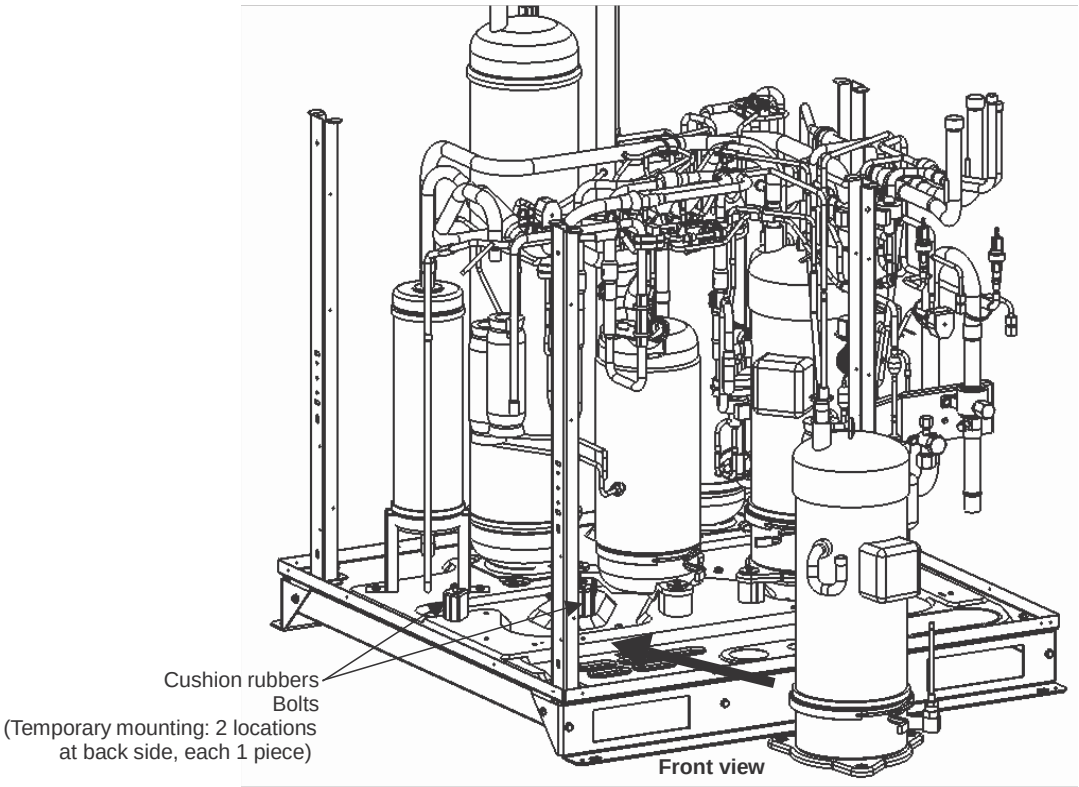

Fig. 25

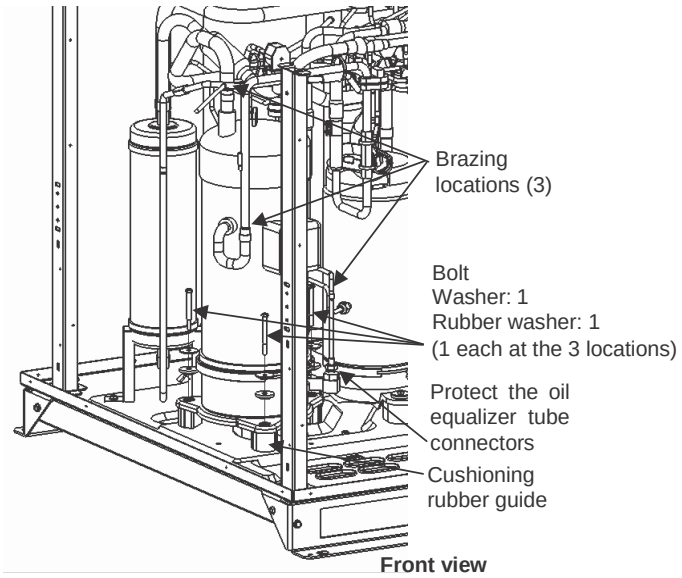

Fig. 26

(6) Set the remaining cushioning rubber beneath the new compressor leg at the locations shown in the figure 26.

(7) Remove the bolts which are temporarily fastening the 2 pieces of cushioning rubber, and anchor the 3 compressor legs using the bolts, washers, and rubber washers.

(8) Insert the pre-shaped tube assembly at the 3 brazing locations indicated.

(9) Connect the manifold gauge to the high- and low-pressure outlet ports at the outdoor unit where the compressor was replaced. Connect the manifold gauge to a nitrogen cylinder and perform nitrogen gas replacement.

(10) Perform copper brazing at the 3 brazing locations.

CAUTION

In the same way as during removal, pay particular attention to protection of the oil equalizing tube connector parts shown in the figure 26.
An O-ring is mounted inside the oil equalizer tube connector parts. It must be protected and do not lose it.

(11) Follow the instructions in “6. Checking for Leakage After Repair” and check for leaks at the outdoor unit where the compressor was replaced.

(12) Re-install all components that were removed. Re-install the electrical component box in the same position as it was before.

CAUTION

Be sure to check for looseness of the power terminal connection at the compress or terminal plate, and to check by pulling vertically on the connections. If the terminals become disconnected easily, replace the wiring Assy.

(13) Follow the instructions in “7. Evacuating System” and apply vacuum to the outdoor unit where the compressor was replaced.

(C) Replacing constant-speed compressor 2 (Compressor 3 on the remote controller alarm display)

■ Removal

(1) Connect the manifold gauge to the high- and low-pressure outlet ports at the outdoor unit where the compressor will be replaced. Connect the manifold gauge to a nitrogen cylinder and perform nitrogen gas replacement.

(2) Follow the instructions in “1. Removing Panels” and “2. Removing Electrical Component Box and Duct” and remove the corresponding parts from the outdoor unit where the compressor will be replaced.

(3) Remove the cap at the compressor terminal plate. Disconnect the power terminal.

(4) Remove the crankcase heater.

(5) Remove the bolts, washers, and rubber washers (1 each at 3 locations).
* The compressor right inner leg is not anchored.

(6) Prepare to disconnect the 3 brazed locations shown in the figure 27.

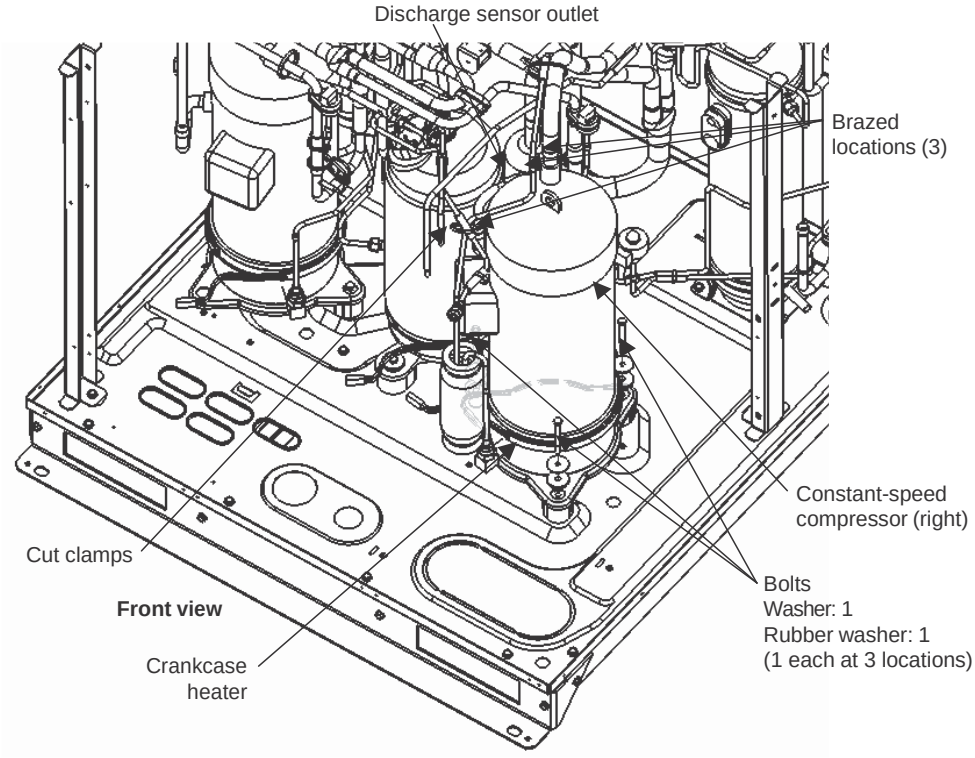

Fig. 27

Protect the sensors, and the plates, rubber, lead wires, clamps, and other items located around the sensors.
Pay particular attention to protection of the check valve shown in the figure, and to removal of the discharge sensor.

(7) Disconnect the 3 brazed locations shown in the figure 27.
* First disconnect the ø6.35 tube, then disconnect the ø12.7 and ø22.22 tubes.

(8) Cut clamps as shown in the figure 27, and then pull the compressor toward you.

■ Installation

(1) Remove the capillary tube assembly from the removed compressor at the brazed location shown in the figure 28. At this time, remove the thermal insulation and sensor before disconnecting the tube.

CAUTION

Protect the oil equalizer tubing, rubber, clamps, and other items.
An O-ring is mounted inside the oil equalizer tube connector parts. It must be protected and do not lose it.

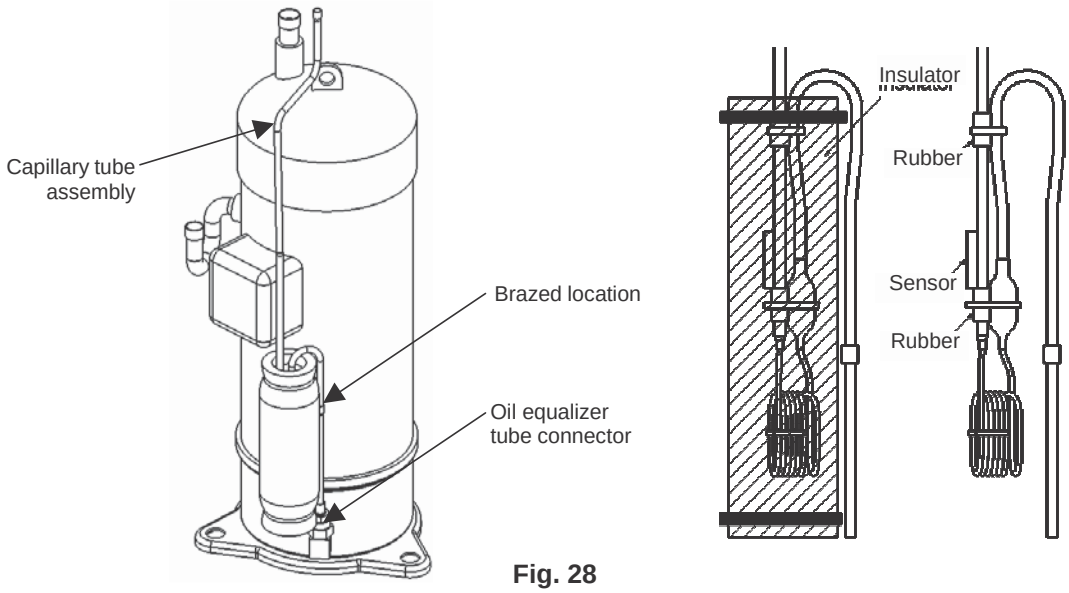

Fig. 28

(2) Remove the tube cap (brazed) (2 pieces) from the new compressor.

(3) Remove the hexagonal caps from the new compressor.
* When removing the hexagonal caps, hold the fixing nut at the main unit side so as not to loose it with a wrench or spanner. And then, loosen and remove the hexagonal cap.

(4) Remove the oil equalizer tube connector parts along with the O-ring from the removed compressor and mount them on the replaced new compressor.

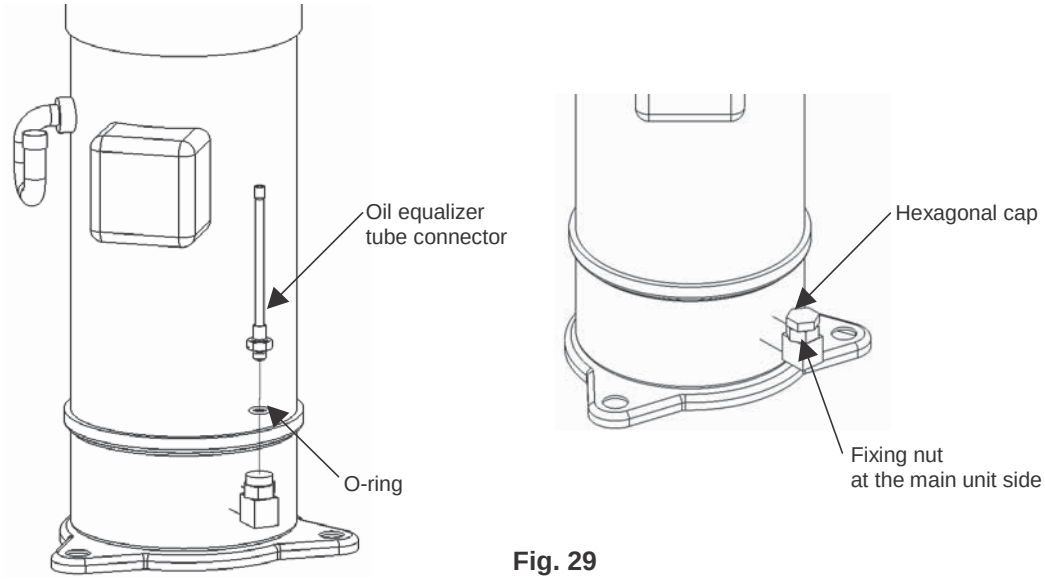

Fig. 29

(5) Install the crankcase heater onto the new compressor.

(6) Use only the bolts to temporarily fasten the cushioning rubber (2 pieces) at the position as shown in the figure 30.

(7) Place the 2 pieces of cushioning rubber onto the legs of the new compressor.

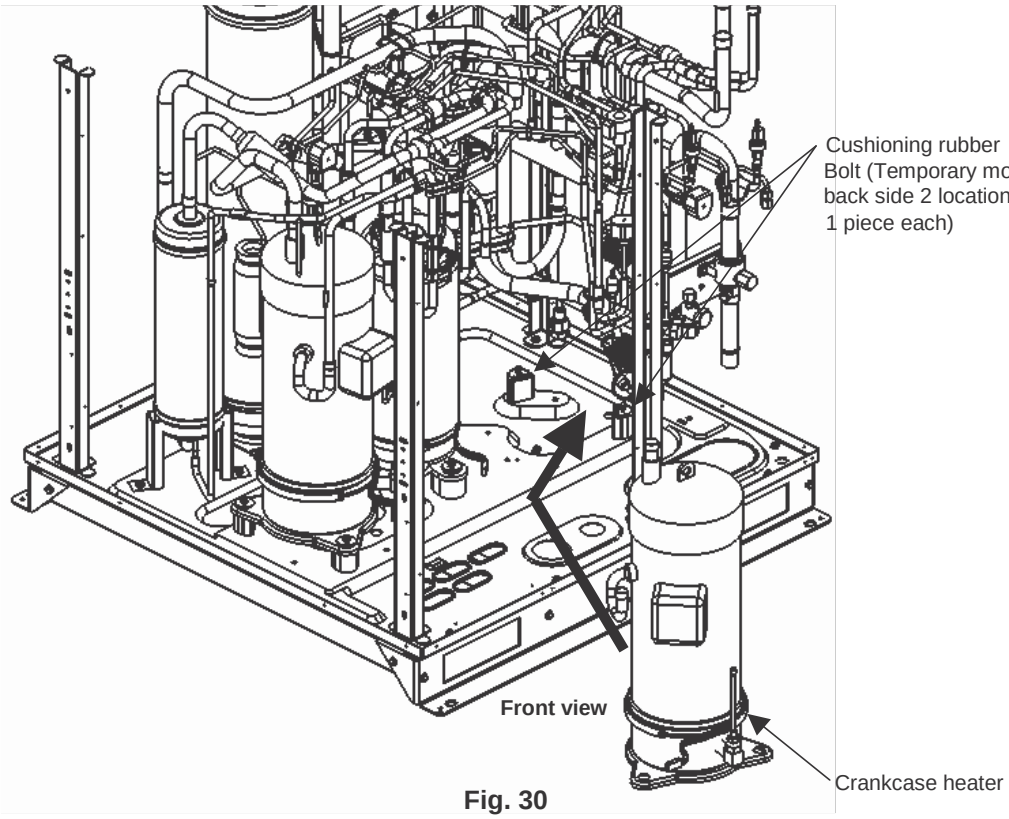

Fig. 30

(8) Place the remaining cushioning rubber onto the new compressor at the location shown in the figure 31.

(9) Remove the bolts which are temporarily fastening the 2 pieces of cushioning rubber, and anchor the 3 compressor legs using the bolts, washers, and rubber washers.

(10) Insert the capillary tube assembly, as shown in the figure 31, at the 2 brazing locations indicated.

(11) Shape the tubes and insert them at the remaining 2 brazing locations.

(12) Connect the manifold gauge to the high- and low-pressure outlet ports at the outdoor unit where the compressor was replaced. Connect the manifold gauge to a nitrogen cylinder and perform nitrogen gas replacement.

(13) Perform copper brazing at the 4 brazing locations.

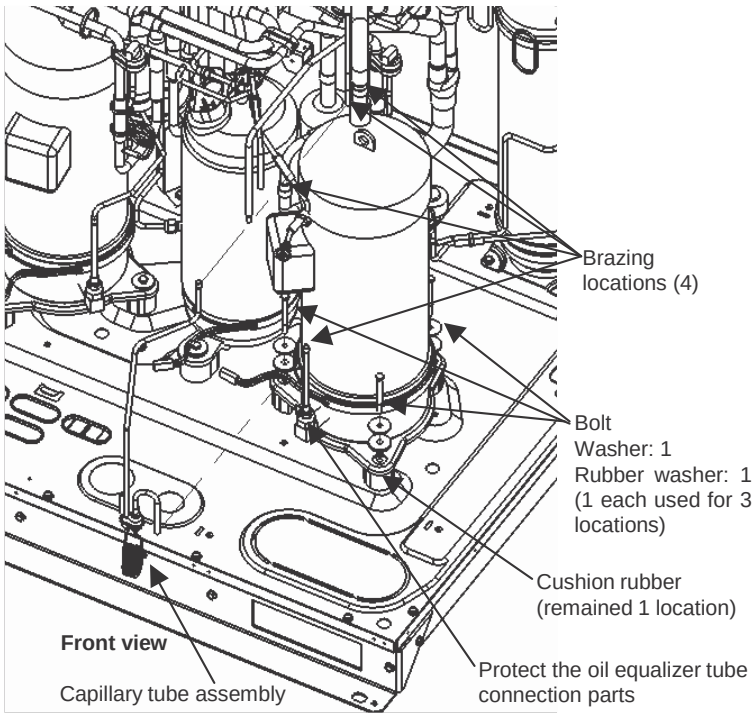

Fig. 31

CAUTION

In the same way as during removal, pay particular attention to protection of the check valve shown in the figure.
An O-ring is mounted inside the oil equalizer tube connector parts. It must be protected and do not lose it.

(14) Re-install all components that were removed. Re-install the electrical component box in the same position as it was before.

CAUTION

- **Be sure to securely re-install the thermal insulation and clamps for the capillary tube assembly in their original conditions, as shown in Fig 28.**
- **Be sure to check for looseness of the power terminal connection at the compressor terminal plate, and to check by pulling vertically on the connections. If the terminals become disconnected easily, replace the wiring Assy.**

(15) Follow the instructions in " 7. Evacuating System " and apply vacuum to the outdoor unit where the compressor was replaced.

(D) Replacing multiple compressors

■ Removal

(1) Follow the instructions in "(A) Replacing the inverter compressor," "(B) Replacing constant-speed compressor 1," and "(C) Replacing constant-speed compressor 2," and remove the compressors.

* There is no predetermined sequence for removal; any compressor may be removed first.

■ Installation

(1) Follow the instructions in "(A) Replacing the inverter compressor," "(B) Replacing constant-speed compressor 1," and "(C) Replacing constant-speed compressor 2," and install the compressors.

* There is no predetermined sequence for installation; any compressor may be installed first.

11. High and Low Pressure Sensors

The outdoor unit connection ports for the high and low pressure sensors employ Schrader-type push-to-release valves. Therefore it is not necessary to recover refrigerant when removing and installing them.

11-1. Removing the High Pressure Sensor

(1) Follow the instructions in “1. Removing Panels” and “2. Removing Electrical Component Box and Duct” and remove the corresponding components from the outdoor unit where the high pressure sensor will be removed.

(2) Disconnect the high pressure sensor connector (3P) (BLK) from terminal CN009 on the outdoor unit control PCB of the outdoor unit where the high pressure sensor will be removed.

(3) Use 2 adjustable wrenches in combination to remove the high pressure sensor.

CAUTION

When removing the high pressure sensor, internal pressure will be applied by the refrigerant in the outdoor unit. The high pressure sensor connection port on the outdoor unit employs a Schrader-type valve.

11-2. Removing the Low Pressure Sensor

(1) Follow the instructions in “1. Removing Panels” and “2. Removing Electrical Component Box and Duct Cover” and remove the corresponding components from the outdoor unit where the low pressure sensor will be removed.

* If there is sufficient space to allow removal of the left-side panel, then it is possible to remove the low pressure sensor without removing the electrical component box and duct.

(2) Disconnect the low pressure sensor connector (3P) (WHT) from terminal CN024 on the outdoor unit control PCB of the outdoor unit where the low pressure sensor will be removed.

(3) Use 2 adjustable wrenches in combination to remove the low pressure sensor.

CAUTION

When removing the low pressure sensor, internal pressure will be applied by the refrigerant in the outdoor unit. The low pressure sensor connection port on the outdoor unit employs a Schrader-type valve.

11-3. Installing the High and Low Pressure Sensors

(1) Use 2 adjustable wrenches in combination to install the high and low pressure sensors.

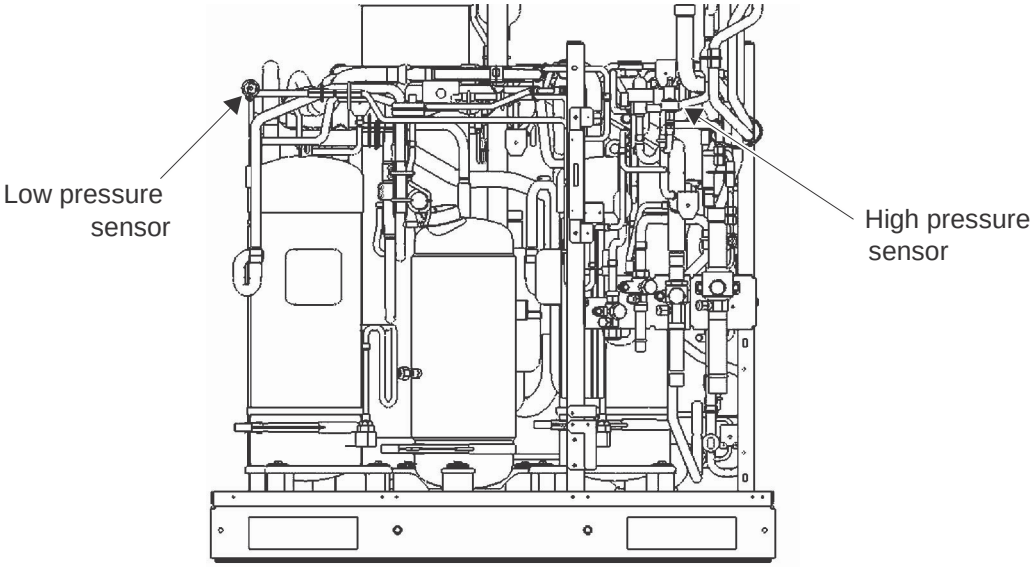

Fig. 32

12. Replacing 4-way valve

When replacing 4-way valve of models U-14MF1E8 and 16MF1E8 (for models with 3 compressors), be sure to protect check valves, which are located adjacent to the 4-way valve, while performing replacement work. Models U-8MF1E8 - 12MF1E8 (for models with1 or 2 compressor) is not located near to the check valves, therefore no protection is necessary.

12-1. When the replacement is available from the right side of the unit

(1) Remove the front panel of the outdoor unit, then remove the right side panel of the unit.

(2) Follow the instructions in "9. Pumping Out Refrigerant from Outdoor Unit", recover the refrigerant of the outdoor unit where the 4-way valve is located.

(3) Connect the manifold gauge to the high and low-pressure outlet ports at the outdoor unit where the 4-way valve will be replaced. Connect the manifold gauge to a nitrogen cylinder and perform nitrogen gas replacement.

(4) Prepare the brazing kit to disconnect the brazed parts (4 locations).

CAUTION **Protect the check valves as shown in the figure 33.**

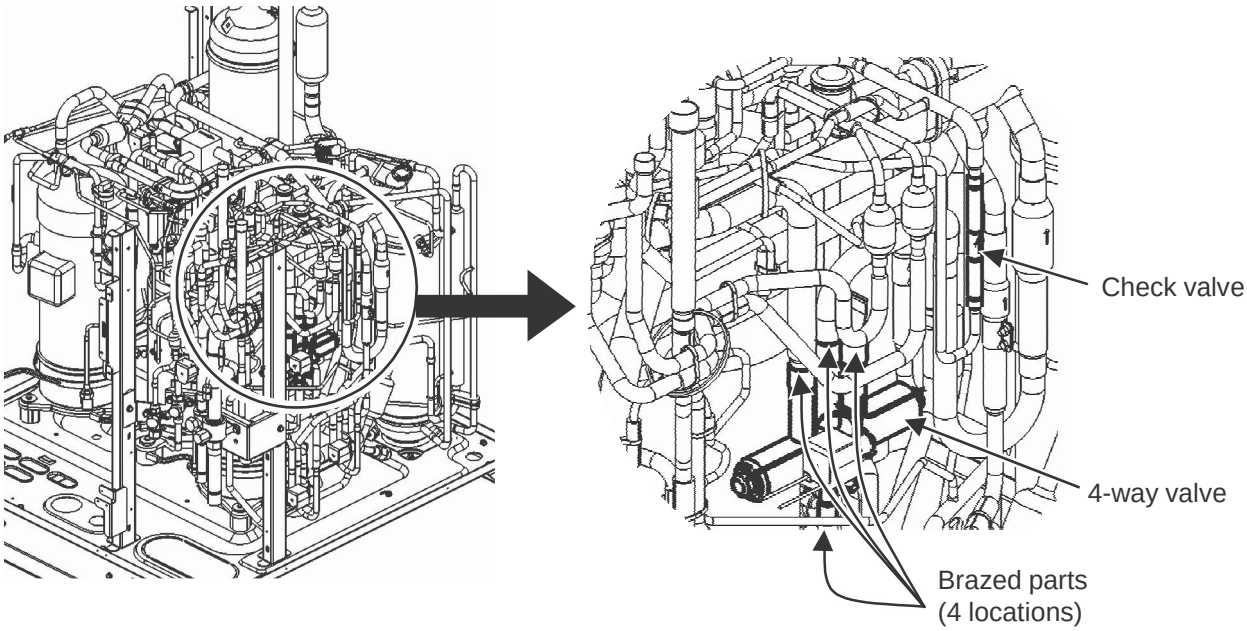

Fig. 33

(5) After replacing the 4-way valve, follow the instructions in "6. Checking for Leakage After Repair", and "7. Evacuating System". The outdoor unit after replaced 4-way valve shall be checked for gas leakage and perform system evacuation.

(6) Fully open service valves on the outdoor unit.
However, if only one outdoor unit is installed, leave the balance tube kept closed.

(7) Charge the recovered refrigerant with the Refrigerant Recovery Unit by referring to **the Installation Instructions** that came with the outdoor unit and the refrigerant recovery unit.

12-2. When the replacement is not available from the right side of the unit

(1) Follow the instructions of "10. Compressor" and remove the constant-speed compressor 2.

(2) Connect the manifold gauge to the high and low-pressure outlet ports at the outdoor unit where the 4-way valve will be replaced. Connect the manifold gauge to a nitrogen cylinder and perform nitrogen gas replacement.

(3) Prepare the brazing kit to disconnect the brazed parts (4 locations).

CAUTION **Protect the check valves as shown in the figure 34.**

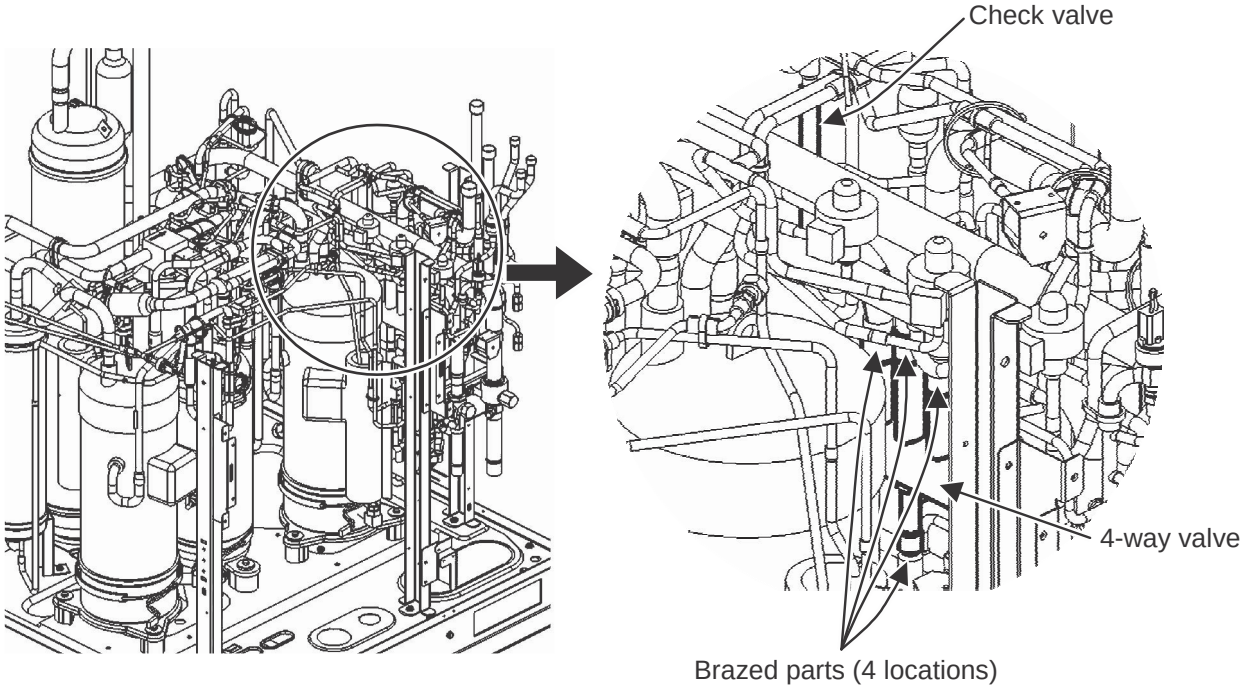

Fig. 34

(4) After replacing the 4-way valve, follow the instructionsin "10. Compressor", and reinstall the removed constant-speed compressor 2 in the outdoor unit.

3. OUTDOOR UNIT MAINTENANCE REMOTE CONTROLLER

1. Overview **3**-2
2. Functions **3**-3
3. Ordinary Display Controls and Functions **3**-4
4. Monitoring Operations **3**-9
5. Outdoor Unit Alarm History Monitor **3**-11
6. Mode Settings **3**-12

OUTDOOR UNIT MAINTENANCE REMOTE CONTROLLER (CZ-RTC2) for 3-WAY SYSTEM

About the outdoor unit maintenance remote controller

The outdoor unit utilizes nonvolatile memory (EEPROM) on its PCB. This allows EEPROM data to replace the setting switches that were present on previous PCBs. The outdoor unit maintenance remote controller is used to set and change these EEPROM data.
In addition to setting and checking the outdoor unit EEPROM data, this remote controller can also be used to monitor the outdoor unit alarm history, monitor the various indoor and outdoor temperatures, and check the indoor unit connection status (number of units, operating mode, etc.).

[Service Checker Section]

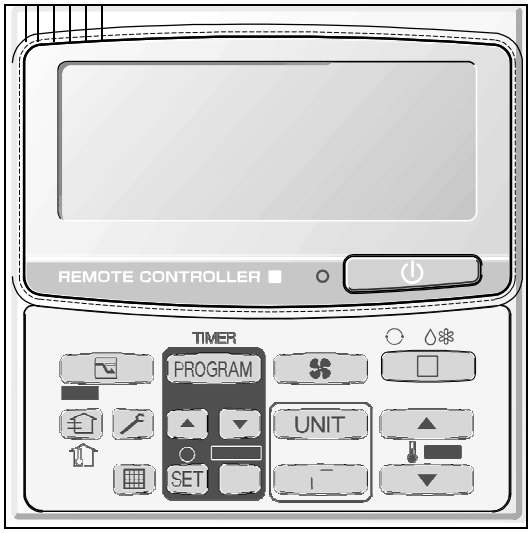

CZ-RTC2

NOTE

Outdoor unit maintenance remote controller does not function as an ordinary remote controller. It is therefore only used for test runs and during servicing.

3

System diagram

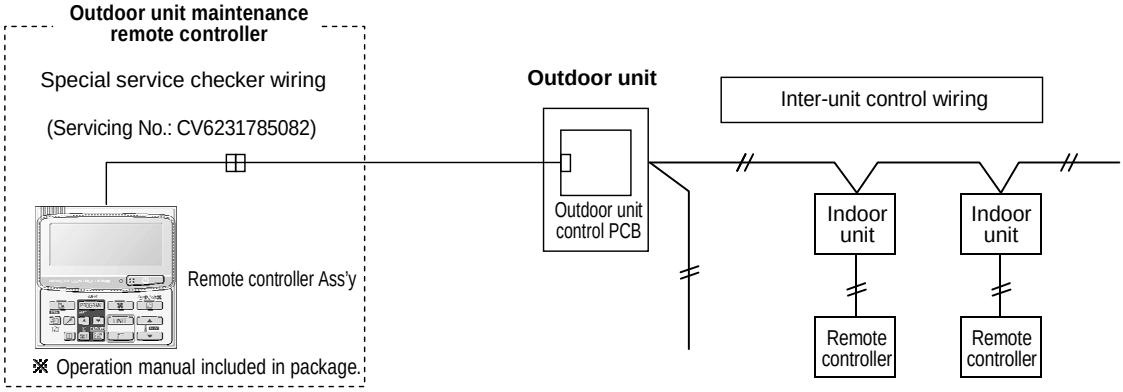

- The special service checker wiring is required in order to connect the outdoor unit maintenance remote controller to the outdoor unit PCB.
- Ordinary remote controllers or other controller are still required for the indoor units, even when the outdoor unit maintenance remote controller is connected.

Functions on the ordinary display

(1) Functions: Button operations can be used to perform the following functions.
- Start/stop of all indoor units
- Switching between cooling and heating
- Test run of all indoor units
- Double-speed operation of indoor units (Do not use for actual operation. Doing so may damage the devices.)

(2) Display: The following can be displayed.
- Alarm details display
- No. of indoor/outdoor units
- Unit Nos. of connected indoor/outdoor units
- Indoor/outdoor unit operating status (blinks when an alarm occurs)
- Indoor unit thermostat ON
- Display of individual outdoor unit alarms
- Total operating time of outdoor unit compressors
- Oil level of the outdoor unit oil sensor
- Total outdoor unit power ON time
- Outdoor unit microcomputer version, other information

Temperature monitor
- Displays the indoor/outdoor unit sensor temperatures.

Outdoor unit alarm history monitor
- Displays the outdoor unit alarm history.

Mode settings
- Setting mode 1 and setting mode 2 are used to make the outdoor EEPROM setting.

Functions on the ordinary display

- Connect the special service checker wiring to the outdoor unit PCB.
  The connection is shown in the figure below.

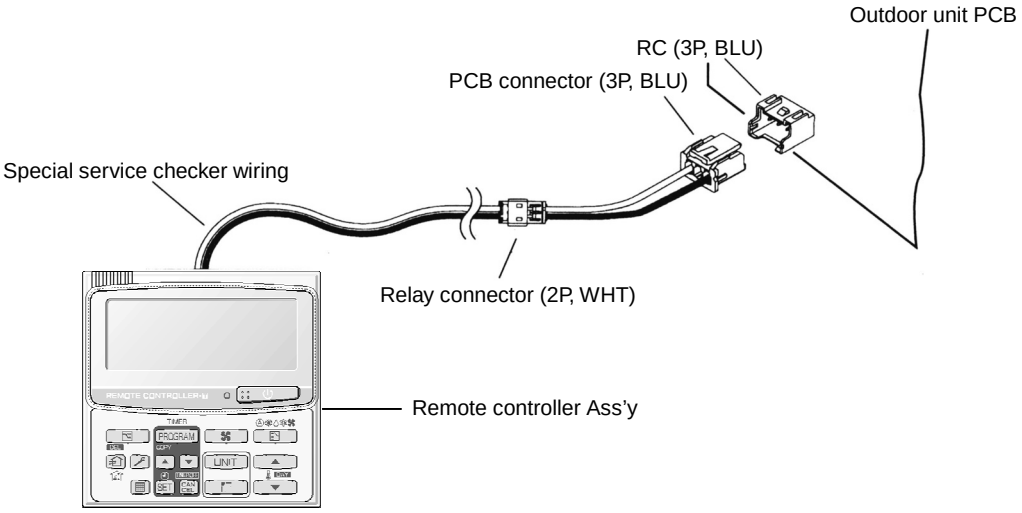

- If the communications line in the inter-unit control wiring is connected, it can be left as-is.
- In case of an independent outdoor unit (1 maintenance remote controller connected to 1 outdoor unit, automatic address setting for indoor units not completed), both setting mode 1 and setting mode 2 can be used.
- The overall system status for that refrigerant system is displayed.

● **All units start/stop (Fig. 1)**

<Operation>

The (ON/OFF operation) button can be used to start and stop all the indoor units.

- The LED turns ON when 1 or more indoor units is operating.
- The LED blinks when an alarm has occurred at 1 or more indoor units during operation.

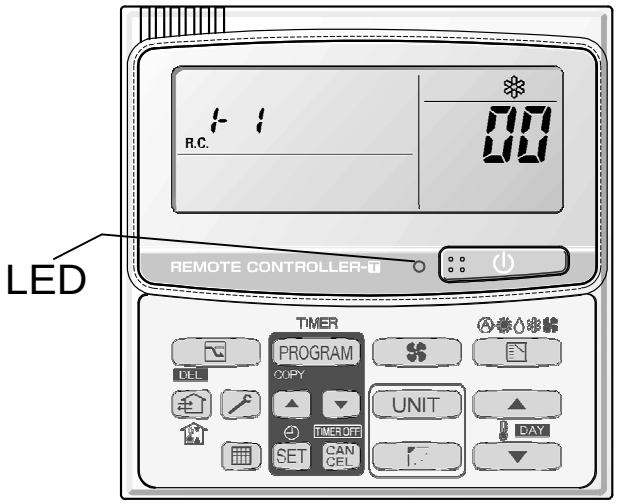

● **Switching between cooling/heating (Fig. 1)**

<Operation>

The (MODE) button switches between heating and cooling modes.

- The specifications are equivalent to the heating/cooling inputs on the previous outdoor unit PCBs.
- The display shows the operating mode of the indoor unit with the lowest unit No.

● **All units test run (Fig. 2)**

<Operation>

The (CHECK) button switches test run ON/OFF for all indoor units.

- Press and hold for 4 seconds to turn ON.
  "TEST" is displayed while the test run is in progress.
- The status of test runs that are started from the indoor unit remote controller are not displayed on the outdoor unit maintenance remote controller.

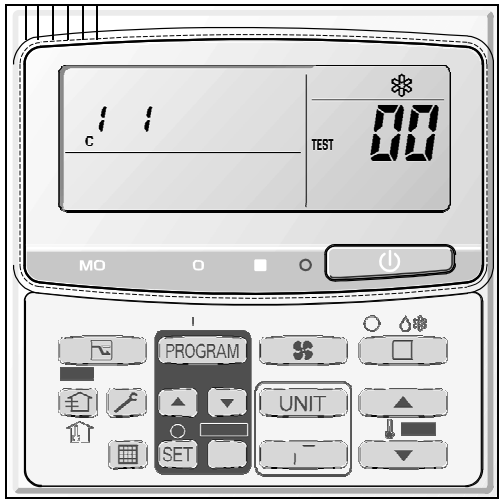

Fig. 2

● **Double-speed**

- Do not use for actual operation.
  (Doing so may damage the devices.)

<Operation>

The timer button is used to switch between double-speed and normal operation.

- During double-speed operation, the SLEEPING MODE mark is displayed.

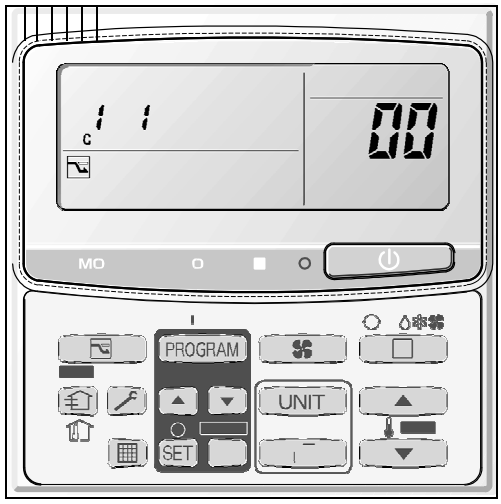

Display (functions)

- Use the temperature setting ▲ and ▼ buttons to change the item code.

Item code	Item	Remarks
①	Outdoor unit alarm ②	Alarm code display
	No. of connected indoor units	Quantity
	Unit Nos. of connected indoor unit	7-segment display
	Operating status of indoor unit	7-segment display
	Thermostat ON status of indoor unit	7-segment display
	No. of connected outdoor units	1 – 8
	Unit Nos. of connected outdoor units	7-segment display
	Operating status of outdoor unit compressor	7-segment display
	Compressor 1 operating time	0 – 99999999 hrs
	Compressor 2 operating time	0 – 99999999 hrs
	Compressor 3 operating time	0 – 99999999 hrs
	Compressor 1 oil level	0 = Empty 1 = Insufficient 2 = Sufficient
	Compressor 2 oil level	0 = Empty 1 = Insufficient 2 = Sufficient
	Compressor 3 oil level	0 = Empty 1 = Insufficient 2 = Sufficient
	Outdoor unit power ON time	0 – 99999999 hrs
	Compressor 1 operation count	0 – 65535 times
	Compressor 2 operation count	0 – 65535 times
	Compressor 3 operation count	0 – 65535 times
	Alarm history 1 (most recent)	Display only. Alarm code and unit No. of unit where alarm occurred are displayed alternately. 0 = CCU 1 – 4 = Outdoor unit
	Alarm history 2	
	Alarm history 3	
	Alarm history 4	
	Alarm history 5	
	Alarm history 6	
	Alarm history 7	
	Alarm history 8 (oldest)	
	Firmware version	Display the version No. × 100.
	Program version	Display the version No. × 100.

(3) XX-YY R.C.

Displays the outdoor unit sub-bus address which is currently selected.
XX = Outdoor system address on main bus line (1 – 30)
YY = Outdoor unit sub-bus address (1 – 8).
“1” appears when there is only 1 outdoor unit.

Locations where ①, ②, and ③are displayed as shown in Fig. 3.

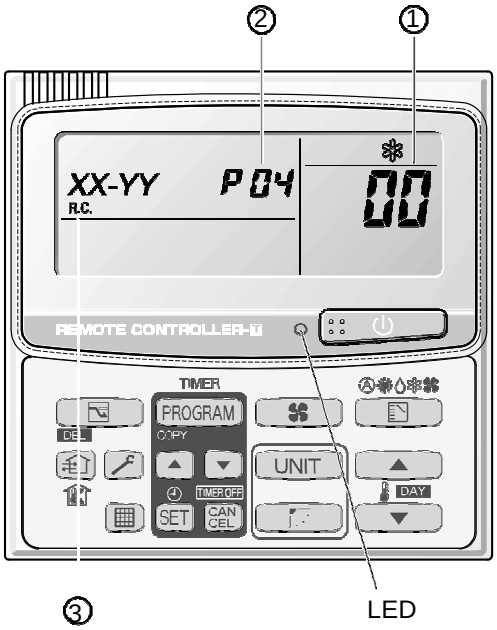

Fig. 3

<Sample displays>

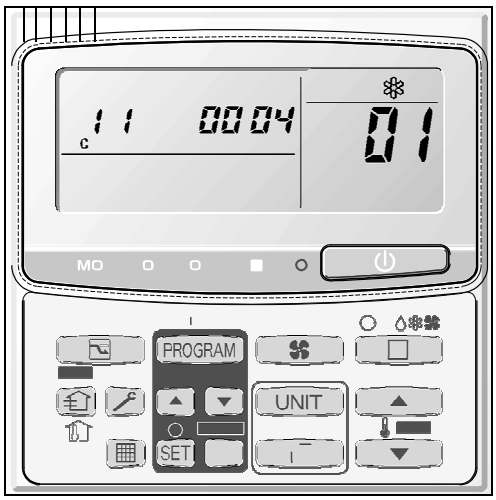

01: <No. of connected indoor units>
4 units connected

Fig. 4

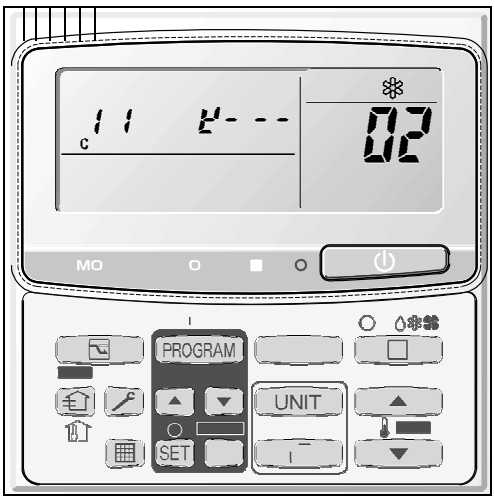

02: <Unit Nos. 1, 2, 3, and 4 are connected>

Fig. 5

Concerning the 7-segment, 4-digit display remote controller timer display

The connected unit Nos. are displayed as shown below, using the 7-segment 4-digit (88:88) display and the colon.

- **Display for unit Nos. 1 – 20**

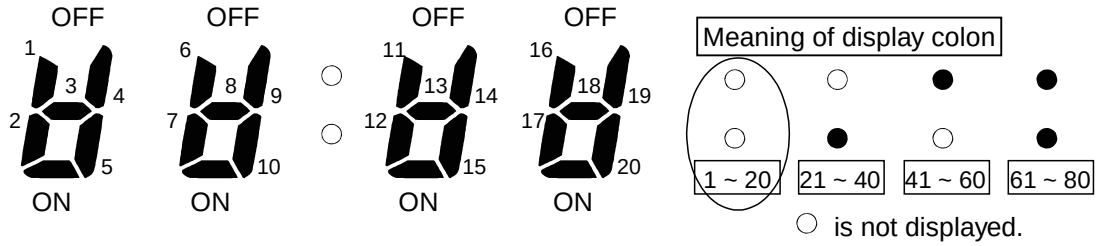

- **Display for unit Nos. 21 – 40**

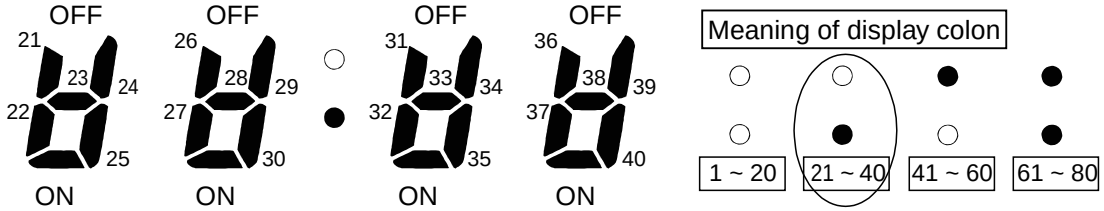

- The meaning of the colon display changes in the same way, allowing unit Nos. up to 80 to be displayed.
- Sample displays of the unit Nos. of connected indoor units

  - Display of unit No. 1
  - Display of unit Nos. 1 and 2
  - Display of unit Nos. 1, 2, and 3
  - Display of unit Nos. 1, 2, 3, and 4

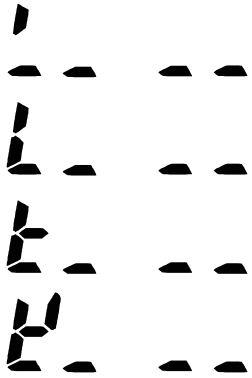

NOTE

The colon display (Unit Nos. 1 – 20, 21 – 40) changes automatically every 10 seconds.
(The display does not change if higher unit numbers do not exist.)
Pressing the button switches the display immediately to the next higher level, even if 10 seconds have not passed.

The total compressor operating time is displayed (in 1-hour units) using 8 digits.

- When the first 4 digits are displayed, the bottom dot of the colon is lit. (Figure (A))
- When the last 4 digits are displayed, the colon points are not lit. (Figure (B))
- The display of the first 4 and last 4 digits changes automatically every 10 seconds. It can also be changed by pressing the button.

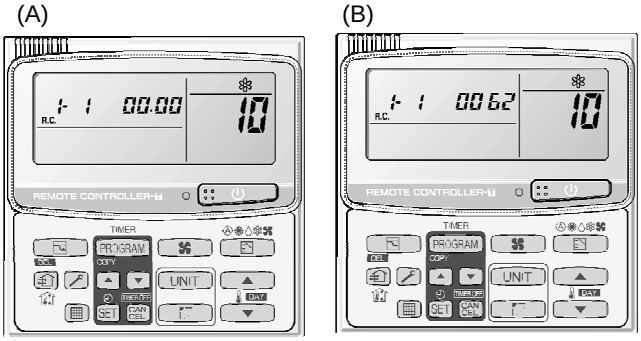

10: <Total compressor operating time>
(A) and (B) are displayed alternately.
(The example here (0000, 0062) indicates 62 hours.)

NOTE

With the outdoor unit maintenance remote controller (when connected to the outdoor unit), the unit remote controller check functions will not operate.

4. Monitoring Operations

Display the indoor unit and outdoor unit sensor temperatures.

<Operating procedure>

① Press and hold the (CHECK) button and CAN CEL buttons simultaneously for 4 seconds or longer to switch to temperature monitor mode.

During temperature monitoring, is lit.

(The display and operations are the same as when monitor mode is started from the unit remote controller.)

② Press the UNIT button and select the indoor unit to monitor.

③ Use the temperature setting ▲ and ▼ buttons to select the item code of the temperature to monitor.

The selected indoor unit No. and the temperature data are displayed.

④ To end monitoring, press the (CHECK) button. The display returns to the normal display.

NOTE The display does not blink.

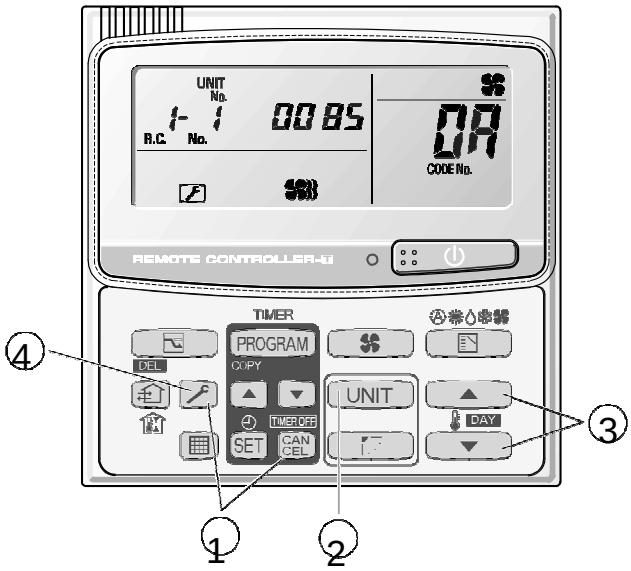

3

Display of unit No. 1 (main unit)

DN	Description	Remarks	
1'	Intake temp.	℃	Indoor unit
11	E1	℃	
11	E2	℃	
1,	E3	℃	
1,	Discharge temp.	℃	
11	Discharge temp. setting	℃	
11	Indoor unit electronic control valve position	STEP	
11	Discharge temp. 1	℃	Outdoor unit
1,	Discharge temp. 2	℃	
1	High-pressure sensor temp.	℃	
11	Heat exchanger gas 1	℃	
1	Heat exchanger liquid 1	℃	
1	Heat exchanger gas 2	℃	
11	Heat exchanger liquid 2	℃	
11	Outdoor air temp.	℃	
1'	Not used		
11	Inverter primary current	A	
11	CT2	A	
1,	MOV1 pulse	STEP	
1,	MOV2 pulse	STEP	
11	Discharge temp. 3	℃	
11	CT3	A	
11	MOV3 pulse	STEP	
11	MOV4 pulse	STEP	
1,	Heat exchanger gas 3	℃	
1	Heat exchanger liquid 3	℃	
11	Low-pressure sensor temp.	℃	
1	Receiver temp.	℃	
1	Oil 1	℃	
'1	Oil 2	℃	
'1	Oil 3	℃	
''	Actual operating frequency	Hz	

NOTE

0A and subsequent items are outdoor unit data. 0A – 22 are for unit No. 1.
2A – 42 are for unit No. 2. 4A – 62 are for unit No. 3.

5. Outdoor Unit Alarm History Monitor

- Displays outdoor unit alarms only. Does not display indoor unit alarms.
- Check the indoor unit alarm histories separately using the indoor unit remote controllers or other control device.

<Operating procedure>

① Press and hold the (CHECK) button and SET button simultaneously for 4 seconds or longer to change to outdoor unit alarm history mode.

During temperature monitoring, displays.

The display and operations are the same as the monitoring of the alarm device history that is performed using the unit remote controller. However, the outdoor unit address appears instead of the unit No.

② Press the UNIT button and select the outdoor unit for alarm history monitoring.

③ Use the temperature setting ▲ and ▼ buttons to select the item code for the alarm history.

The display shows the address of the selected outdoor unit, the item code, and the alarm history (alarm data).

The outdoor unit address is displayed as R.C. XX-YY.
System XX = Outdoor unit system address
R.C. XX = Outdoor unit system address
YY = Outdoor unit sub-bus address (always “1” for 3-WAY ECO-i units)

Unit code is displayed as 01 – 08. 01 indicates the most recent alarm.

The alarm history is indicated by the alarm code. (If there have been no alarm codes, “-- --” is displayed.)

④ To clear the alarm history, press the CANCEL button. (The outdoor unit alarm history will be cleared.)

⑤ To exit, press the (CHECK) button. The display returns to the normal remote controller display.

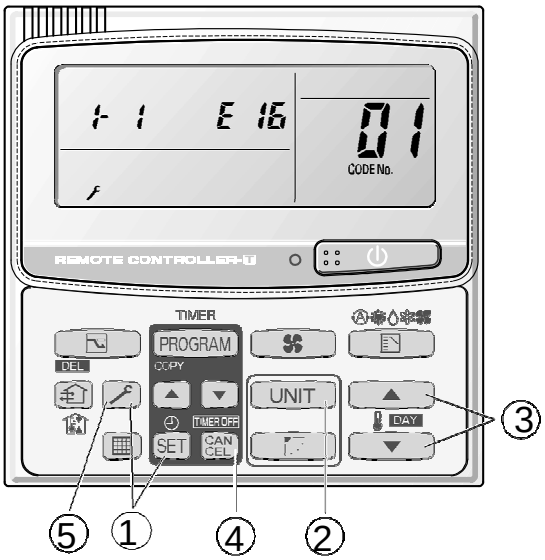

3

Setting mode 1

<Operating procedure>

① Press and hold the (CHECK) button and (VENTILATION) button simultaneously for 4 seconds or longer.

② Use the temperature setting ▲ and ▼ buttons to change the item code. The item codes and setting data are shown in the table below.

③ Use the timer time ▲ and ▼ buttons to change the setting data.

To confirm the changed setting data, press the SET button.

(At this time, " SETTING " stops blinking and remains lit.)

④ During this mode, " SETTING " is displayed, blinking. The outdoor unit address display section displays "ALL," the item code number (DN value in the table), and the setting data (8 digits).

(The setting data is displayed in 8 digits. The display changes between the first 4 digits (Fig. Ⓐ) and the last 4 digits (Fig. Ⓑ). When the first 4 digits are displayed, the bottom dot of the colon is lit.)

⑤ To exit the setting mode, press the (CHECK) button.

Ⓐ **Display of first 4 digits**

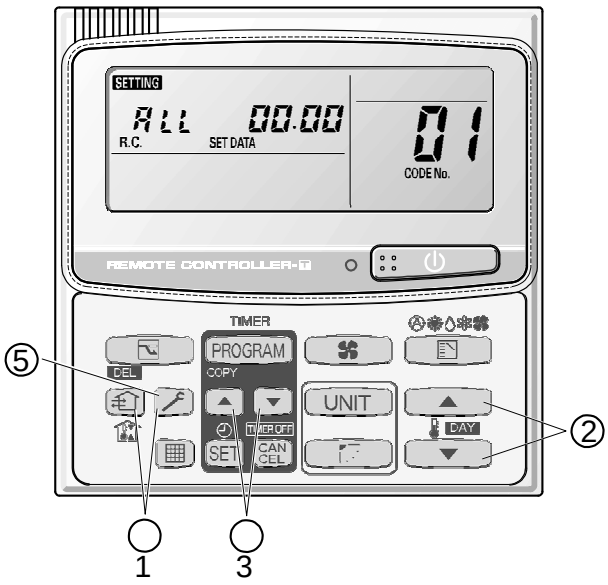

Ⓑ **Display of last 4 digits**

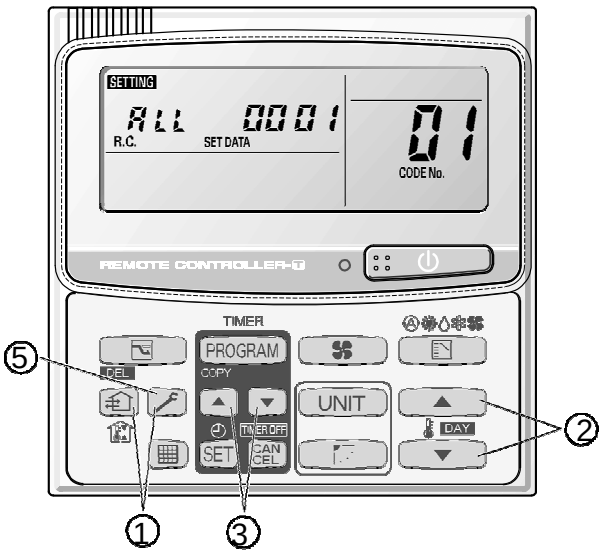

Ⓐ and Ⓑ are displayed alternately.
(Example shows display of 0000 0001.)

DN	Parameter	Description
04	Snowfall sensor usage	0 = Sensor input not present. Control is performed. 1 = Sensor input present. Control is performed. 2 = Sensor input not present. Control is not performed. 3 = Sensor input present. Control is not performed.
05	Outdoor unit fan Quiet mode	0 = Disabled 1 = Quiet mode 1 2 = Quiet mode 2 3 = Quiet mode 3 4 = Quiet mode 4
10	Energy saving mode	0 = None 1 = Discharge temp. control only (Mode 3) 2 = Demand only (Mode 2) 3 = Discharge temp. control + Demand (Mode 1)
11	Energy saving operation plug	0 = Independent 1 = All indoor units linked
12	Demand 1 current	0 = 0% 1 = 40 … 4 = 70 7 = 100 8 = 120 9 = 140 10 = 160 11 = 200 12 = –1 (no limit)
0F	Demand 2 current	0 = 0% 1 = 40 … 4 = 70 7 = 100 8 = 120 9 = 140 10 = 160 11 = 200 12 = –1 (no limit)
	High static pressure mode	0 = Disabled 6 = High static pressure mode * Charge when the external static pressure is increased to over 30 Pa.

■ Setting mode 2

<Operating procedure>

① Press and hold the (CHECK) button, SET button, and CAN CEL button simultaneously for 4 seconds or longer.

② Use the temperature setting ▲ and ▼ buttons to change the item code. The item codes and setting data are shown in the table below.

③ Use the timer time ▲ and ▼ buttons to change the setting data.
To confirm the changed setting data, press the SET button.
(At this time, " SETTING " stops blinking and remains lit.)

④ During this mode, " SETTING " is displayed, blinking. The display shows the set outdoor unit address "System XX-YY" (System XX = System address, YY = Address at outdoor unit sub-bus), item code number (DN value in the table below), and the setting data (8 digits).

(The setting data is displayed in 8 digits. The display changes between the first 4 digits (Fig. Ⓐ) and the last 4 digits (Fig. Ⓑ). When the first 4 digits are displayed, the bottom dot of the colon is lit.)

⑤ To end the setting mode, press the (CHECK) button. The display returns to the normal display mode.

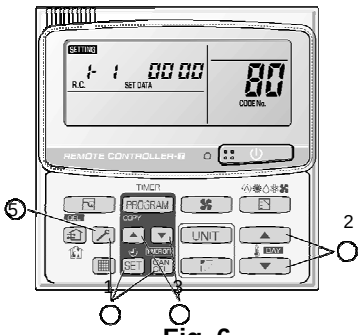

Fig. 6

Ⓐ **Display of first 4 digits**

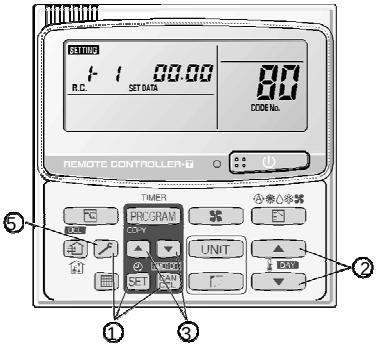

Ⓑ **Display of last 4 digits**

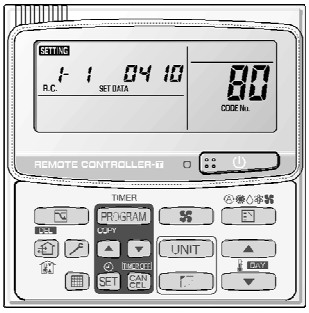

80 : **<Refrigerant type>** Ⓐ and Ⓑ are displayed alternately. (Example shows 0000 0410 (R410A).)

List of Item Codes

DN	Parameter	Description
81	Outdoor unit capacity	0 = Disabled 224 = 8 hp 280 = 10 hp 355 = 12 hp 400 = 14 hp 450 = 16 hp

4. REMOTE CONTROLLER FUNCTIONS

1. Simple Settings Function **4**-2
2. Detailed Settings Function **4**-4
3. Remote Controller Servicing Functions **4**-15

1. Simple Settings Function

- This allows the filter lifetime, operating mode priority change, central control address, and other settings to be made for an individual or group-control indoor unit to which the remote controller used for simple settings is connected.

  When simple settings mode is engaged, operation stops at the individual or group-control indoor unit to which the remote controller for simple settings is connected.

<Procedure>

① Press and hold the [wrench] and [home] buttons simultaneously for 4 seconds or longer.

② " SETTING," unit No. " 1- 1" (or " ALL " in the case of group control), item code " 01 ," and settings data " 00 XX " are displayed blinking on the remote controller LCD display (Fig. 1). At this time, the indoor unit fan (or all indoor unit fans in the case of group control) begins operating.

③ If group control is in effect, press the UNIT button and select the address (unit No.) of the indoor unit to set. At this time, the fan at the indoor unit begins operating.

* If unit No. " ALL " is displayed, the same setting will be made for all indoor units.

④ Press the temperature setting ▲ / ▼ buttons to select the item code to change.

⑤ Press the timer time ▲ / ▼ buttons to select the desired setting data.

* For item codes and setting data, refer to the following page.

⑥ Press the SET button. (The display stops blinking and remains lit, and setting is completed.)

⑦ Press the [wrench] button to return to normal remote controller display.

[Remote Controller Functions Section]

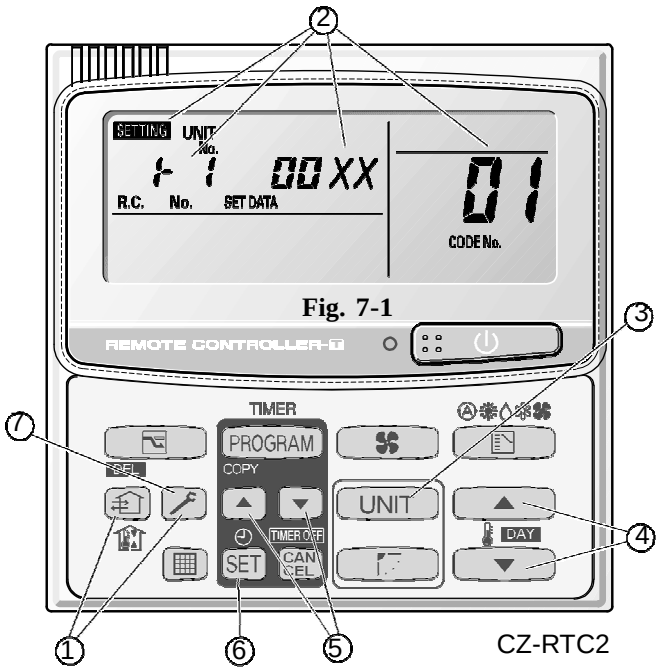

Fig. 7-1

Fig. 1

4

1. Simple Settings Function

List of Simple Setting Items

Item code	Item	Setting data		
		No.	Description	
01	Filter sign ON time (fitlter life time)	0000	Not displayed	
		0001	150 hours	
		0002	2,500 hours	
		0003	5,000 hours	
		0004	10,000 hours	
		0005	Use the filter clogging sensor.	
02	Degree of filter fouling	0000	Standard (setting at time of shipping)	
		0001	Highly fouled (Filter sign ON time is reduced to one-half the set time.)	
03	Central control address	0001	Central control address 1	
		0002	Central control address 2	
		0003	Central control address 3	
		~	~	
		0064	Central control address 64	
		0099	No central control address set (setting at time of shipping)	
04	Operating mode priority change	0000	Normal (setting at time of shipping)	
		0001	Priority	
05	Fan speed when heating thermostat is OFF		Compressor ON	Compressor OFF
		0000	MED 1 min., LO 3 min.	LO
		0001	MED	LO
		0002	LO	LO
		0004	MED 1 min., LO 3 min.	MED
		0005	MED	MED
		0006	LO	MED
06	Heating intake temperature shift	0000	No shift	
		0001	Shifts intake temperature 1℃ down.	
		0002	Shifts intake temperature 2℃ down.	
		0003	Shifts intake temperature 3℃ down.	
		0004	Shifts intake temperature 4℃ down.	
		0005	Shifts intake temperature 5℃ down.	
		0006	Shifts intake temperature 6℃ down.	
07	Electric heater installation	0000	No heater	
		0001	Heater installed	
08	Humidifying when heater thermostat is OFF	0000	No (setting at time of shipping)	
		0001	Yes	
0d	Permit/prohibit automatic heating/cooling	0000	Permit	
		0001	Prohibit	
0F	Cool-only	0000	Normal	
		0001	Cool only (Set “1” for item code OD.)	

NOTE

- In order to avoid water leakage and damage to the fan, do not set for humidifying when the thermostat is OFF unless a vaporizing humidifier is used.
- Consider the device purpose and type when changing the settings. Incorrect settings may result in malfunction.
- Do not change any setting data that does not appear in this list.

2. Detailed Settings Function

- This allows the system address, indoor unit address, and other settings to be made for the individual or group-control indoor unit to which the remote controller used for detailed settings is connected.

  When detailed settings mode is engaged, operation stops at the individual or group-control indoor unit where the remote controller used for detailed settings is connected. Simple settings items can also be set at this time.

<Procedure>

① Press and hold the [🔧], [SET] and [CAN CEL] buttons simultaneously for 4 seconds or longer.

② " SETTING," unit No. " 1- 1 " (or " ALL " in the case of group control), item code " 10 ," and settings data " 00 XX " are displayed blinking on the remote controller LCD display (Fig. 2).

At this time, the indoor unit fan (or all indoor unit fans in the case of group control) begins operating.

③ If group control is in effect, press the [UNIT] button and select the address (unit No.) of the indoor unit to set. At this time, the fan at the indoor unit begins operating.

④ Press the temperature setting [▲] / [▼] buttons to select the item code to change.

⑤ Press the timer time [▲] / [▼] buttons to select the desired setting data.

* For item codes and setting data, refer to the following page.

⑥ Press the [SET] button. (The display stops blinking and remains lit, and setting is completed.)

⑦ Press the [🔧] button to return to normal remote controller display.

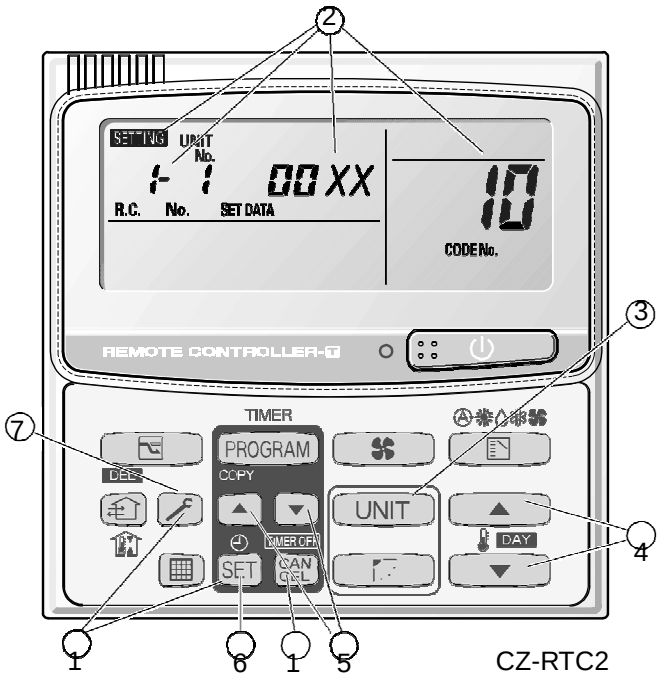

Fig. 2

4

List of Detailed Setting Items

Item code	Item	Setting data					
		No.	Description	No.	Description	No.	Description
10	Type	0001	4-Way Casstte (60×60) (U1, Y1)	0002	2-WAY Cassette (L1)	0003	1-Way Cassette (D1)
		0005	Low Silhouette Ducted (F1) Slim Low Static Ducted (M1)	0006	High Static Pressure Ducted (E1)	0007	Ceiling (T1)
		0008	Wall mounted (K1)	0010	Floor Standing (P1)	0011	Concealed Floor Standing (R1)
11	Indoor unit capacity	0001	22 (Type 22)	0003	28 (Type 28)	0005	36 (Type 36)
		0007	45 (Type 45)	0009	56 (Type 56)	0011	71 (Type 73) For S-71MP1E5 and S-71MR1E5
		0012	80 (Type 73) (Except S-71MP1E5, S-71MR1E5)	0013	90 (Type 90)	0015	112 (Type 106)
		0017	140 (Type 140)	0018	160 (Type 160)	0021	224 (Type 224)
		0023	280 (Type 280)				
12	System address	0001	Unit No. 1				
		0002	Unit No. 2				
		0003	Unit No. 3				
		~	~				
		0030	Unit No. 30				
		0099	Not set				
13	Indoor unit address	0001	Unit No. 1				
		0002	Unit No. 2				
		0003	Unit No. 3				
		~	~				
		0064	Unit No. 64				
		0099	Not set				
14	Group control address	0000	Individual (1:1 = Indoor unit with no group wiring)				
		0001	Main unit (One of the group-control indoor units)				
		0002	Sub unit (All group-control indoor units except for main unit)				
		0099	Not set				
17	Cooling intake temperature shift	–010	Shifts intake temperature by –10℃.				
		–009	Shifts intake temperature by –9℃.				
		~	~				
		–001	Shifts intake temperature by –1℃.				
		0000	No intake temperature shift				
		0001	Shifts intake temperature by +1℃.				
		~	~				
		0009	Shifts intake temperature by +9℃.				
		0010	Shifts intake temperature by +10℃.				
18	Automatic stop time after operation start *Can be set in 5-minute units.	0000	Function disabled				
		0001	Stops automatically 5 minutes after operation starts.				
		0002	Stops automatically 10 minutes after operation starts.				
		~	~				
		0123	Stops automatically 615 minutes after operation starts.				
		0124	Stops automatically 620 minutes after operation starts.				
		0125	Stops automatically 625 minutes after operation starts.				

2. Detailed Settings Function

Item code	Item		Setting data	
			No.	Description
1b (1B)	Forced thermostat ON time		0000	5 minutes
			0001	4 minutes
1C	Cooling discharge temperature shift		–010	–10℃
			–009	–9℃
			–008	–8℃
			~	~
			0010	10℃
1d	Heating discharge temperature shift		–010	–10℃
			–009	–9℃
			–008	–8℃
			~	~
			0010	10℃
1E	Temperature shift for cooling/heating change in auto heat/cool mode		0001	±1℃
			0002	±2℃
			0003	±3℃
			~	~
			0007	±7℃
1F (Upper limit) 20 (Lower limit)	Change to remote control temperature setting range	Cooling	0018	18℃ (Lower limit at shipment)
			0019	19℃
			~	~
			0029	29℃
			0030	30℃ (Upper limit at shipment)
21 (Upper limit) 22 (Lower limit)		Heating	0016	16℃ (Lower limit at shipment)
			0017	17℃
			~	~
			0029	29℃
			0030	30℃ (Upper limit at shipment)
23 (Upper limit) 24 (Lower limit)		Drying	0018	18℃ (Lower limit at shipment)
			0019	19℃
			~	~
			0029	29℃
			0030	30℃ (Upper limit at shipment)
25 (Upper limit) 26 (Lower limit)		Auto heat/cool	0017	17℃ (Lower limit at shipment)
			0018	18℃
			~	~
			0026	26℃
			0027	27℃ (Upper limit at shipment)
29	Humidifier operation		0000	Normal
			0001	Ignore heat exchanger temperature conditions.
2A	Filter (CN70) input switching		0000	Filter input (differential pressure switch input)
			0001	Alarm input (for trouble input about air cleaner or similar device)
			0002	Humidifier input (Operates linked with drain pump when humidifier is ON.)
2C	Indoor unit electronic control valve		0000	Present (Setting at shipment)
			0002	None
2E	T10 terminal switching		0000	Normal (Used as optional relay PCB or JEMA standard HA terminal.)
			0001	Used for OFF reminder
			0002	Fire prevention input

2. Detailed Settings Function

Item code	Item	Setting data	
		No.	Description
2F	Automatic drain pump operation	0000	No forced operation
		0001	Forced operation for 1 minute
		~	~
		0060	Continuous operation
31	Ventilation fan operation	0000	None
		0001	Ventilation fan operated by remote controller.
32	Wired remote controller sensor	0000	Not used. (Body sensor is used.)
		0001	Remote control sensor is used.
34	"Operation change control in progress" display	0000	Normal (displayed)
		0001	Not displayed
35	OFF reminder function for when weekly timer is used	0000	None
		0001	Only stop time setting is enabled.
3A	Discharge temperature control	0000	Discharge temperature control OFF
		0001	Discharge temperature control ON
3b	RAP valve	0000	RAP valve control OFF
		0001	RAP valve control ON
3C	Heat exchanger temperature for cold air discharge (Heat exchanger control point for control to prevent cold air)	0013	Control temperature 13℃
		0014	Control temperature 14℃
		~	~
		0025	Control temperature 25℃
		0026	Control temperature 26℃
3d	Fan output switching	0000	Output linked with fan. (ON when indoor unit fan is operating.)
		0001	Fan mode operation output
3E	Drain pump delayed start time	0000	No delayed start
		0001	1 sec. delayed start
		0002	2 sec. delayed start
		~	~
		0058	58 sec. delayed start
		0059	59 sec. delayed start
		0060	60 sec. delayed start
40	Humidifier setting	0000	Humidifier output OFF. Drain pump stopped.
		0001	Humidifier output ON. Drain pump operates.
		0002	Humidifier output ON. Drain pump operates for 1 minute when total humidifier operating time reaches 60 minutes.
		0003	Humidifier output ON. Drain pump stopped.
45	Flap operation mode	0000	Standard setting
		0001	Draft reduction mode (Flap lower-limit position is shifted upwards.)
46	Flap swing mode	0000	Smudging reduction mode (Flap swing upper-limit position is shifted downwards.)
		0001	Normal mode
		0002	Draft reduction mode (Flap swing lower-limit position is upwards.)

Item code	Item	Setting data		
		No.	Description	
5d	Fan tap setting (Fan tap change in order to prevent drop in air discharge caused by filter installation)		DC fan tap operating mode	Purpose
		0000	Standard	Standard (setting at shipment)
		0001	High ceiling use	High ceiling setting 1 (with standard panel)
			For low static-pressure filter	Ultra long-life filter, oil guard panel, ammonia deodorizing filter, optical regenerative deodorizing filter
		0003	High ceiling use	High ceiling setting 2 (with standard panel)
			For low static-pressure filter	(Antibacterial) high-performance filter (90%) (Antibacterial) high-performance filter (65%) Air-cleaning unit, air-cleaning unit + optical regenerative deodorizing filter, deodorant (activated charcoal) filter
			For air-blocking material	For 3-way discharge, when discharge duct is connected
		0006	For air-blocking material	For 2-way discharge
5E	Humidifier ON time (ON time per 60 seconds)	0000	No humidifier output	
		0001	1 sec.	
		0002	2 sec.	
		~	~	
		0058	58 sec.	
		0059	59 sec.	
		0060	Continuously ON	
5F	Repeat timer switching	0000	Function disabled	
		0001	Function enabled	
60	Timer function change prohibit	0000	Function disabled	
		0001	Function enabled	
62	Smudging control	0000	No smudging control	
90	Setting the Flap Separately *Only for 4-way Cassette type	0000 0001 0002 0003 0004 0005 0006		
91	Setting the Flap Separately *Only for 4-way Cassette type			
92	Setting the Flap Separately *Only for 4-way Cassette type			
93	Setting the Flap Separately *Only for 4-way Cassette type			

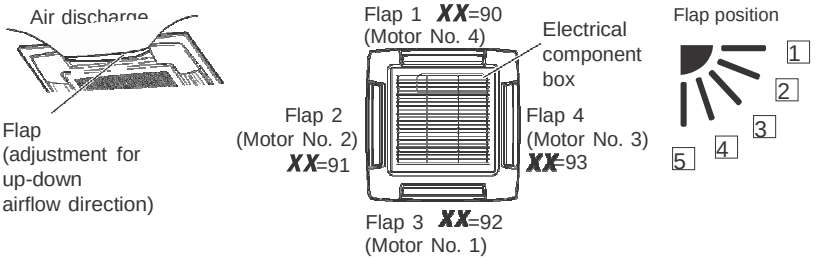

Setting data	Flap position during operation
0000	Without separate setting
0001	Swing
0002	Move to position 1 and stay
0003	Move to position 2 and stay
0004	Move to position 3 and stay
0005	Move to position 4 and stay
0006	Move to position 5 and stay

When the flap position is set to 4 or 5 and the unit is in the cooling or dry mode, the flap position is moved to 3 and the operation is started.

NOTE

The flap swings during the operation under "Setting the Flap Separately".

At this time, the unselected flaps are moved to the position 1.

Simple setting items

Item code	Item	Description
01	Filter sign ON time setting (filter lifetime)	Changes the indoor unit filter lifetime when a high-performance filter or other optional product is installed.
02	Degree of filter fouling	Reduces the filter sign ON time to 1/2 of the standard time (setting at the time of shipping) for cases when filter fouling is more severe than normal.

Filter sign ON times for each model

Model data	Model	Filter sign ON time										
		Standard		Long-life		Super long-life		High performance 65		High performance 90		Pressure differential switch
		Standard	High fouling	Standard	High fouling	Standard	High fouling	Standard	High fouling	Standard	High fouling	
0001	4-Way cassette (U1, Y1)	×	×	2500	1250	5000	2500	2500	1250	×	×	×
0002	2-Way cassette (L1)	×	×	2500	1250	10000	5000	2500	1250	2500	1250	×
0003	1-Way cassette (D1)	×	×	2500	1250	×	×	×	×	×	×	×
0005	Low Silhouette Ducted (F1) Slim Low Static Ducted (M1)	×	×	×	1250	5000	2500	2500	1250	5000	2500	×
0006	High Static Pressure Ducted (E1)	×	×	×	1250	×	×	2500	1250	5000	2500	×
0007	Ceiling (T1)	×	×	2500	1250	×	×	2500	1250	×	×	×
0008	Wall Mounted (K1)	150	75	×	×	×	×	×	×	×	×	×
0010	Floor Standing (P1)	150	75	×	×	×	×	×	×	×	×	×
0011	Concealed Floor Standing (R1)	150	75	×	×	×	×	×	×	×	×	×

Unit: hour

NOTE

- × indicates that there is no corresponding filter.
- 150 indicates the filter sign ON time that is set at shipment.
- High fouling: Set when 0001 is selected for the degree of filter fouling (item code 02).

4

Item code	Item	Description
03	Central control address	Set when using a central control device. Used when setting the central control address manually from the remote controller.
04	Operating mode priority change	Note (1)

NOTE

(1) Explanation of operation mode priority change

Enabled only in 2WAY System heat-pump models.

<Function>

With indoor units that are installed in combination with an outdoor unit model where either heating or cooling operation can be selected, the operating mode of the indoor unit that starts first takes priority. The first indoor unit to operate can select any operating mode. When any mode other than fan mode is selected, then the operating modes that cannot be selected are not displayed on all remote controllers that are subsequently operated. “Operation change control in progress” is displayed, indicating that there are restrictions on the operating modes that can be selected.

• **Controlling the operating mode from a specific remote controller**

- When there are multiple remote controllers in the same refrigerant system, it is possible to set one remote controller as the priority remote controller (the remote controller which is given priority for selecting the operating mode). (If 2 or more remote controllers are set as priority remote controllers, an alarm will occur at the remote controllers, and operation will not be possible.)
- When the priority remote controller is set to the operating mode for control, then all other remote controllers can select only the permitted operating mode, regardless of whether the priority remote controller is operating or stopped.
- When a controlled remote controller is operated, “Operation change control in progress” is displayed.

Set mode at priority remote controller	Modes that can be selected at other remote controllers
Cooling or dry	Cooling, dry, fan
Heating	Heating, fan
Fan	Whichever mode (heating/cooling) is selected first

NOTE

There are other methods to avoid control in which the mode selected first takes priority.

Methods of remotely controlling the operating mode

(1) Use the central functions of a central control device.

(2) Use a remote control relay PCB at the outdoor unit.

2. Detailed Settings Function

When the operating mode at the priority remote controller is changed, the operating modes of other remote controllers change as shown below.

Mode change at priority remote controller		Operating modes at other remote controllers	
Current mode	**New mode**	**Current mode**	**New mode**
Cooling or dry	Heating	Cooling or dry	Heating
		Fan	Fan (not changed)
Heating	Cooling	Heating	Cooling
		Fan	Fan (not changed)
Cooling	Dry	Cooling	Cooling (not changed)
		Dry	Dry (not changed)
Heating	Dry	Heating	Cooling
		Fan	Fan (not changed)
Cooling or dry	Fan	Cooling	Cooling (not changed)
		Dry	Dry (not changed)
		Fan	Fan (not changed)
Heating	Fan	Heating	Heating (not changed)
		Fan	Fan (not changed)

Item code	Item	Description
05	Fan speed setting when heating thermostat is OFF	Changes the fan speed setting when the heating thermostat is OFF.
06	Heating intake temperature shift	Shifts the intake temperature during heating. Can be set when the body thermostat is used.
07	Electric heater installation	Set when cost distribution is performed using an AMY central control system or similar system, and when an optional electric heater is installed. (This is unrelated to control of the electric heater.)
08	Humidifying when heater thermostat is OFF	Normally humidifying does not occur when the thermostat is OFF during heating operation. However, this setting can be changed in order to increase the amount of humidifying. Caution: In order to avoid water leakage and damage to the fan, do not use this setting unless a vaporizing humidifier is used.
0D	Permit/prohibit automatic heating/cooling	This setting can be used to prevent the automatic heating/cooling display on the remote control if the unit configuration permits automatic heating/cooling operation.
0F	Cooling-only	This setting allows a heat pump indoor unit to be operated as a cooling-only unit.

2. Detailed Settings Function

Item code	Item	Description
10	Unit type	Set when the indoor unit EEPROM memory is replaced during servicing.
11	Indoor unit capacity	
12	System (outdoor unit) address	These are not set at the time of shipping from the factory. These must be set after installation if automatic address setting is not performed.
13	Indoor unit address	
14	Group address	
17	Cooling intake temperature shift	Shifts the intake temperature during cooling and dry operation. (Enabled only when the body thermostat is used.) Increase this value when it is difficult to turn the thermostat ON.
18	Automatic stop time after operation start	The time at which an indoor unit is automatically stopped after operation starts can be set in increments of 5 minutes.
1C	Cooling discharge temperature shift	Shifts the set value for models which perform discharge temperature control. (Discharge temperature control models: Floor discharge, wall built-in, direct expansion coil outdoor air treatment, high-fresh)
1d	Heating discharge temperature shift	
1E	Temperature shift for cooling/heating change in “auto heat/cool” mode	“Auto heat/cool” selects the operating mode automatically based on the difference between the room temperature and the temperature set on the remote controller. This setting establishes a shift temperature for the heating/cooling temperature setting relative to the remote controller temperature setting.

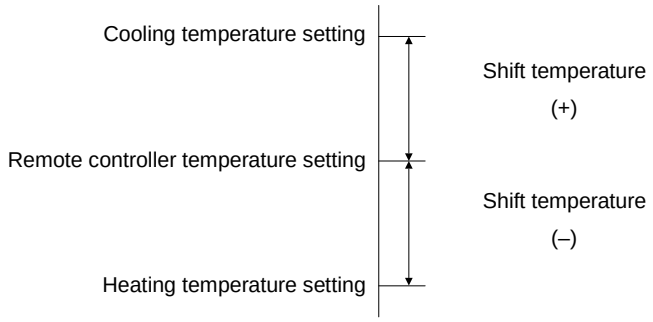

Item code	Item		Description
1F (Upper limit) **20** (Lower limit)	Change to the remote control temperature setting range	Cooling	This setting changes the temperature range (upper limit and lower limit) which is set from the remote controller or central control device. The set upper limit must be greater than or equal to the lower limit. If the temperature setting is to be a single point, set the upper limit and lower limit to the same temperature.
21 (Upper limit) **22** (Lower limit)		Heating	
23 (Upper limit) **24** (Lower limit)		Drying	
25 (Upper limit) **26** (Lower limit)		Auto heat/cool	
29	Humidifier operation which ignores the heat exchanger temperature		During heating operation, the humidifier operates when the heat exchanger temperature is suitable for humidifying. This setting is used to ignore this condition for humidifier operation and operate the humidifier more.
2A	Filter input switching		This setting switches the filter input according to the purpose of use.
2C	Indoor unit electronic control valve		This setting indicates whether or not an indoor unit electronic control valve is present. At the time of shipping, this setting is set according to the conditions of the indoor unit.
2E	T10 terminal input switching		Ordinarily, the T10 terminal is used as the HA terminal at the time of shipping. However, this setting is used when the T10 terminal is used for OFF reminder or for fire prevention input.
31	Ventilation fan operation from remote controller		It is possible to install a total heat exchanger and ventilation fan in the system, which can be started and stopped by the wired remote controller. The ventilation fan can operate linked with the start and stop of the indoor unit, or can be operated even when the indoor unit is stopped. Use a ventilation fan that can accept the no-voltage A contact as the external input signal. In the case of group control, the fans are operated together. They cannot be operated individually.
32	Switching to remote controller sensor		This setting is used to switch from the body sensor to the remote controller sensor. Check that “remote controller sensor” is displayed. Do not use this setting with models that do not include a remote controller sensor. Do not use this setting if both the body sensor and remote sensor are used.
34	ON/OFF of “Operation change control in progress” display		In a MULTI system with multiple remote controllers, switching between heating and cooling is restricted, and “Operation change control in progress” is displayed. This setting is used to prevent this display from appearing. Refer to the item concerned with operating mode priorities.
35	OFF reminder function for weekly timer		This setting switches the operation when the weekly timer is connected to the remote controller. This can be used to prevent cases in which the unit is accidentally left ON. There is no change when this setting is ON, however it is necessary to set the weekly timer ON time.

(Continued)

(Continued from previous page)

Item code	Item	Description
3C	Heat exchanger temperature for cold air discharge	The heat exchanger temperature control point for prevention of cold air discharge during heating operation can be changed.
3d	Fan output switching	The indoor unit PCB optional output for the fan can be switched according to the purpose of use.
3E	Drain pump delayed start time	The drain pump starts after the set time delay after cooling operation stops.
40	Humidifier drain pump setting	This specifies the humidifier and drain pump setting.
45	DC flap operation mode	Changes flap operation to draft reduction mode.
46	DC flap swing mode	Selects the swing operation mode for the flap.
5d	DC fan tap setting	Sets the DC fan tap according to the purpose of use. Change the settings data at the same time.
5E	Humidifier ON time	Sets the humidifier output ON time for when the humidifier is operating. ON/OFF control is performed during humidifier operation. This setting therefore sets the ON time per 60-second interval.
5F	Stop at time set for OFF timer after operation starts	This setting enables a function that stops operation when the amount of time set for the OFF timer has passed after remote controller operation was started.
60	Timer function change prohibit	This function prohibits changes from being made to the remote controller time setting.
62	Smudging control	Smudging control is disabled when 0000 is set.

3. Remote Controller Servicing Functions

- The remote controller includes a number of servicing functions. Use these as needed for test runs and inspections.

List of Servicing Functions

Functions	Description	Button operation	Reset operation	Unit status
Test run	Operation with forced thermostat ON	Press and hold the button for 4 seconds or longer.	Press the button.	Current operation is maintained.
Sensor temperature display	Temperature display from each sensor	Press and hold the and CANCEL buttons for 4 seconds or longer.		
Servicing check display	Alarm history display	Press and hold the and SET buttons for 4 seconds or longer.		
Simple settings	Filter lifetime, operating mode priority, central control address, and other settings	Press and hold the and buttons for 4 seconds or longer.		When settings are made from a remote controller, the indoor unit where that remote controller is connected stops.
Detailed settings	System address, indoor unit address, central control address, and other settings	Press and hold the , CANCEL and SET buttons for 4 seconds or longer.		
Automatic address	Automatic address setting based on command from the wired remote controller	Press and hold the and the timer operation buttons for 4 seconds or longer.	Automatic reset	Entire system stops.
Address change	Change of indoor unit address	Press and hold the and the timer operation buttons for 4 seconds or longer.	Press the button.	

4

3. Remote Controller Servicing Functions

Test Run Function

Operates the unit with the thermostat forced ON.

<Procedure>

① Press and hold the button for 4 seconds or longer.

② "Test" appears on the remote controller LCD display (Fig. 3).

③ Start operation.

④ Press the button to return to normal remote controller display.

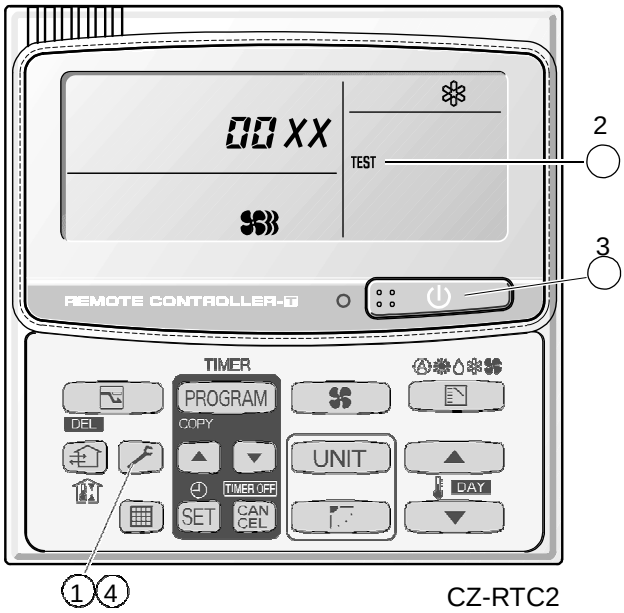

Fig. 3

Sensor Temperature Display Function (displayed regardless of whether unit is operating or stopped)

The procedure below displays the sensor temperatures from the remote controller, indoor unit, and outdoor unit on the remote controller.

<Procedure>

① Press and hold the [🔧] and [CAN CEL] buttons simultaneously for 4 seconds or longer.

② The unit No. "X-X" (main unit No.), item code "XX" (sensor address), and servicing monitor " 00XX " (sensor temperature) are displayed on the remote controller LCD display. (See Fig. 4 at right.)

③ Press the temperature setting [▲] / [▼] buttons and select the item code to the address of the sensor to monitor.
(For the relationships between the sensor addresses and sensor types, refer to the table of temperature sensors and addresses on the next page.)

④ If group control is in effect, press the [UNIT] button to select the unit to monitor.
Press the temperature setting buttons to select the item code to change.

⑤ Press the [🔧] button to return to normal remote controller display.

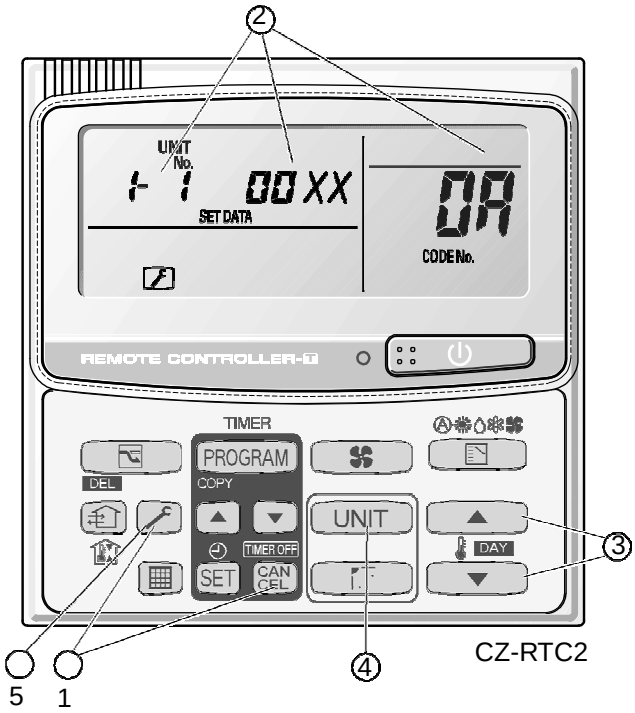

* Display shows a discharge temperature of 00XX at unit No. 1-1.
In case, for example, the display shows "0085" in the figure above, a discharge temperature from the outdoor unit stands for 85℃.

Fig. 4

NOTE

The temperature display appears as "- - - -" for units that are not connected.

* If monitor mode is engaged while normal operation is in progress, only the parts of the LCD display shown in the figure will change. Other parts continue to display the same information as during normal operation.

4

Indoor unit sensors	
02	Intake temp.
03	E1
04	E2
05	E3
06	Discharge temp.
07	Discharge temp. setting
08	Position of indoor unit electronic control valve

Outdoor unit sensors			
Unit No.1	Unit No.2	Unit No.3	
0A	2A	4A	Discharge temp. 1
0B	2B	4B	Discharge temp. 2
0C	2C	4C	High-pressure sensor temp.
0D	2D	4D	Heat exchanger gas 1
0E	2E	4E	Heat exchanger liquid 1
0F	2F	4F	Heat exchanger gas 2
10	30	50	Heat exchanger liquid 2
11	31	51	Outdoor air temp.
12	32	52	—
13	33	53	For inspection
14	34	54	CT2
15	35	55	For inspection
16	36	56	For inspection
17	37	57	Discharge temp. 3
18	38	58	CT3
19	39	59	For inspection
1A	3A	5A	For inspection
1B	3B	5B	Heat exchanger gas 3
1C	3C	5C	Heat exchanger liquid 3
1D	3D	5D	Low-pressure sensor temp.
1E	3E	5E	Receiver temp.
1F	3F	5F	Oil 1
20	40	60	Oil 2
21	41	61	Oil 3
22	42	62	For inspection

5. TROUBLE DIAGNOSIS

1. Contents of Remote Controller Switch Alarm Display **5**-2
2. Outdoor Unit Control Panel LED Display **5**-4
3. Remote Controller Servicing Functions **5**-5
4. 3-WAY Alarm Codes **5**-7
5. Blinking Inspection Display **5**-27
6. Inspection of Parts **5**-29
7. Test Pin **5**-30

1. Contents of Remote Controller Switch Alarm Display

ON:○ Blinking:☼ OFF:●

Possible cause of malfunction			Wired remote control display	Wireless remote controller receiver display: Operation	Timer	Standby for heating
Serial communication errors Mis-setting	Remote controller is detecting error signal from indoor unit.	Error in receiving serial communication signal. (Signal from main indoor unit in case of group control) Outdoor system address, indoor unit address, or indoor unit address independent/main/sub unit setting has not been made. (Auto address is not completed.)	<E01>	Operating lamp blinking ☼	●	●
		Error in transmitting serial communication signal.	<E02>			
	Indoor unit is detecting error signal from remote controller and system controller.		<<E03>>			
	Indoor unit is detecting error signal from outdoor unit.	• Error in receiving serial communication signal. • When turning on the power supply, the number of connected indoor units does not correspond to the number set. (Except R.C. address is “0.”) • Group wiring failure of indoor units in the refrigerant system (occurring when remote controller is operated immediately after automatic address setting)	E04	Heating ready lamp blinking ●	●	☼
	Outdoor unit is detecting error signal from indoor unit.	• Error in receiving serial communication signal. • There is an indoor unit which does not send signals when the power is ON.	E06			
	Improper setting	• Indoor unit address setting is duplicated.	<<E08>>	Operating lamp blinking ☼	●	●
		• Duplicated remote controller “main” setting.	<<E09>>			
	Improper setting	Automatic address setting start is prohibited. AP pin was short-circuited at time when automatic address setting was started.	E12			
	Indoor unit communication error of group control wiring.	Error of main indoor unit in receiving serial communication signal from sub indoor units.	E18			
	During auto. address setting, number of connected units does not correspond to number set.	Number of connected indoor units is less than the number set.	E15	Heating ready lamp blinking ●	●	☼
		Number of connected indoor units is more than the number set.	E16			
		No indoor unit is connected during auto. address setting.	E20			
		Main outdoor unit is detecting error signal from sub outdoor unit.	E24			
		Duplicated outdoor unit address.	E25			
		Mismatch in “No. of outdoor units” setting.	E26			
		Error of sub outdoor unit in receiving serial communication signal from main outdoor unit.	E29			
	Improper setting	Connected indoor unit is not a multi unit.	<<L02>>	Operating and heating ready lamps blinking simultaneously ☼	●	☼
		Duplication of main indoor unit address setting in group control.	<L03>			
		Group control wiring is connected to individual control indoor unit.	L07			
		Indoor unit address is not set.	L08			
		Capacity code of indoor unit is not set.	<<L09>>			
		Incorrect wiring of remote group control wiring (in case of shared solenoid valve kit)	L11			
		Mismatch of outdoor unit type.	L17			
		Duplication of outdoor R.C. address setting.	L04	Operating and heating ready lamps blinking simultaneously ☼	○	☼
		Capacity code of outdoor unit is not set.	L10			
Thermistor fault	Indoor unit	Indoor coil temp. sensor (E1)	<<F01>>	Operating and timer lamps blinking alternately ☼	☼	●
		Indoor coil temp. sensor (E3)	<<F03>>			
		Indoor suction air (room) temp. sensor	<<F10>>			
		Indoor discharge air temp. sensor	<<F11>>			

Continued

1. Contents of Remote Controller Switch Alarm Display

ON:○ Blinking:☼ OFF:●

Possible cause of malfunction			Wired remote control display	Wireless remote controller receiver display: Operation	Timer	Standby for heating
Thermistor fault	Outdoor unit	Compressor 1 (INV) discharge temp. sensor	F04	Operating and timer lamps blinking altemately		
		Compressor 2 (constant speed) discharge temp. sensor	F05			
		Compressor 3 (constant speed) discharge temp. sensor	F22			
		Outdoor air temp. sensor	F08			
		Heat exchanger 1 liquid temp. sensor	F07			
		Heat exchanger 1 gas temp. sensor	F06			
		Compressor intake temp. sensor (suction temp)	F12			
		High-pressure sensor	F16	☼	☼	○
		Low-pressure sensor	F17			
		Heat exchanger 2 liquid temp. sensor	F24			
		Heat exchanger 2 gas temp. sensor	F23			
		Heat exchanger 3 liquid temp. sensor	F26			
		Heat exchanger 3 gas temp. sensor	F25			
Ceiling panel connection failure			<<P09>>	Timer and heat ready lamp blinking altemately		
Protective device	Indoor unit	Thermal protector in indoor unit fan motor is activated.	<<P01>>			
		Float switch is activated.	<<P10>>			
		Fan inverter protection function activated.	<<P12>>	●	☼	☼
		Oxygen (O_2) gas sensor activated.	P14			
	Outdoor unit	Compressor 1 (INV) discharge temp. trouble	P03	Operating and heat ready lamp blinking altemately		
		High-pressure switch	P04			
		Reverse phase (missing phase) detected.	P05			
		DCCT, ACCT overcurrent (compressor less than 80 Hz)	P16			
		Compressor 2 (constant speed) discharge temp. trouble	P17			
		Compressor 3 (constant speed) discharge temp. trouble	P18			
		Outdoor unit fan trouble	P22	☼	●	☼
		DCCT, ACCT overcurrent (80 Hz or more)	P26			
		Start failure caused by compressor wire missing phase, DCCT failure, or similar problem (INV compressor start failure).	P29			
Failure of nonvolatile memory IC (EEPROM) on indoor unit control PCB			F29	Operating and timer lamp blinking simultaneously		
				☼	☼	●
Failure of nonvolatile memory IC (EEPROM) on outdoor unit control PCB			F31	Operating and timer lamp blinking simultaneously		
				☼	☼	○
Protective device	Overload current detected.	Compressor 2 (constant speed)	H11	Timer lamp blinking		
		Compressor 3 (constant speed)	H21			
	Lock current detected.	Compressor 2 (constant speed)	H12			
		Compressor 3 (constant speed)	H22			
	No current detected when compressor was ON.	Compressor 1 (INV)	H03			
		Compressor 2 (constant speed)	H13			
		Compressor 3 (constant speed)	H23			
	Discharge temp. sensor trouble	Compressor 2 (constant speed)	H15			
		Compressor 3 (constant speed)	H25			
	Outdoor unit protection	Low-pressure trouble	H06	●	☼	●
	Outdoor unit protection	HIC trouble alarm	H31			
Low oil alarm			H07			
Connection failure of oil detection sensor		Compressor 1 (INV)	H08			
		Compressor 2 (constant speed)	H27			
		Compressor 3 (constant speed)	H28			
Fusing of electromagnetic contact (Current detected when compressor was OFF)			CHECK only blinking	(No display changes)		
Automatic backup operation						

<< >> alarm indication: Does not affect the operation of other indoor units.
< > alarm indication: In some cases may affect the operation of other indoor units.

5

2. Outdoor Unit Control Panel LED Display

(○ : ON ☼ : Blinking ● : OFF)

LED (RED)		Display meaning
1	2	
○	○	After the power is turned ON (and automatic address setting is not in progress), no communication with the indoor units in that system is possible.
(Both ON)		
●	○	After power is turned ON (and automatic address setting is not in progress), 1 or more indoor units are confirmed in that system; however, the number of indoor units does not match the number that was set.
(OFF)	(ON)	
●	●	Automatic address setting was completed successfully. (After the power is turned ON, and automatic address setting is not in progress, the number of detected indoor units connected to that system matches the number that was set, and regular communications are occurring.)
(Both OFF)		
☼	☼	Automatic address setting is in progress.
(Blinking alternately)		
☼	☼	At time of automatic address setting, the number of indoor units did not match the number that was set.
(Both blinking)		
☼	☼	Alarm display LED 1 blinks M times, then LED 2 blinks N times. The cycle then repeats. M = 2: P alarm 3: H alarm 4: E alarm 5: F alarm 6: L alarm N = Alarm No. Example: LED 1 blinks 2 times, then LED 2 blinks 17 times. The cycle then repeats. Alarm is “P17.”
(Blinking alternately)		

5

Sensor temperature display function (displayed both when unit is running and stopped)

• Use the following check procedure to display the sensor temperatures from the remote controller, indoor unit, and outdoor unit sensors on the remote controller display.

<Check procedure>

① Press and hold the (CHECK) button and CANCEL button simultaneously for 4 seconds or longer.

② The following appears on the remote controller LCD display: unit No. X – X (main unit No.), item code XX (sensor address), and service monitor 00XX (sensor temperature).

(See figure at right. ②)

③ Press the temperature setting ▲ and ▼ buttons to change the item code to the sensor address of the sensor you wish to monitor.

(For the relationship between the sensor address and sensor type, refer to the sensor temperature relationship table on next page.)

④ If group control is in effect, press the UNIT button to change to the unit you wish to monitor.

⑤ Press the (CHECK) button to return to normal remote controller operation.

<Note> The temperature display for units that are not connected appears as "- - - -."

- If monitor mode is engaged during ordinary operation, the only parts of the LCD display that change are those shown in ②in the figure.
  The other parts remain unchanged during normal operation.

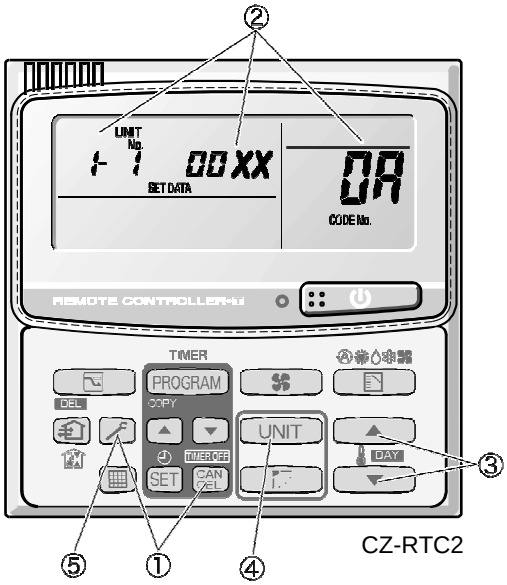

Example

1-1 : Unit No.
0A : Item code (sensor address)
00XX : Discharge temp. (TD)

5

Sensor Temperature Relationship Table

Location where sensor is installed	Sensor address			Sensor type	Sensor address			Sensor type
Indoor unit	01			Remote controller temperature	06			Discharge temperature sensor
	02			Indoor unit intake temperature	07			
	03			Indoor unit heat exchanger temperature (E1)	08			Indoor unit electronic expansion valve position
	04				09			
	05			Indoor unit heat exchanger temperature (E3)				
Outdoor unit	Unit No. 1	Unit No. 2	Unit No. 3		Unit No. 1	Unit No. 2	Unit No. 3	
	0A	2A	4A	Discharge temperature 1	17	37	57	Discharge temperature 3
	0b	2b	4b	Discharge temperature 2	18	38	58	CT3
	0C	2C	4C	High-pressure sensor temperature	1b	3b	5b	Heat exchanger gas 3
	0d	2d	4d	Heat exchanger gas 1	1C	3C	5C	Heat exchanger liquid 3
	0E	2E	4E	Heat exchanger liquid 1	1d	3d	5d	Low-pressure sensor temperature
	0F	2F	4F	Heat exchanger gas 2	1E	3E	5E	Detected reservoir tank temp.
	10	30	50	Heat exchanger liquid 2	1F	3F	6F	Detected oil temp. 1
	11	31	51	Outside air temperature	21	41	61	Detected oil temp. 2
	14	34	54	CT2	22	42	62	Detected oil temp. 3

4. 3-WAY Alarm Codes

With types 8HP, 10HP and 12HP the INV compressor is compressor 1, and the constant-speed compressor is compressor 2.

With types 14HP and 16HP, the INV compressor is compressor 1, and the constant-speed compressors (AC1, AC2) are compressors 2 and 3.

Alarm code	Alarm meaning	Page
E06	Outdoor unit failed to receive serial communication signals from indoor unit.	**5**-9
E12	Automatic address setting start is prohibited.	**5**-9
E15	Automatic address setting alarm (too few units)	**5**-9
E16	Automatic address setting alarm (too many units)	**5**-10
E20	No indoor units at automatic address setting.	**5**-10
E24	Outdoor unit (INV) failed to receive communications from another outdoor unit (constant-speed).	**5**-10
E25	Outdoor unit address setting failure (duplication)	**5**-11
E26	Mismatch in outdoor unit quantity	**5**-11
E29	Outdoor unit failed to receive communication from outdoor unit (main)	**5**-11
F04	Compressor 1 discharge temperature sensor trouble	**5**-12
F05	Compressor 2 discharge temperature sensor trouble	**5**-12
F22	Compressor 3 discharge temperature sensor trouble	**5**-12
F06	Gas temperature sensor trouble at outdoor heat exchanger 1 (In)	**5**-13
F07	Liquid temperature sensor trouble at outdoor heat exchanger 1 (Out)	**5**-13
F08	Outdoor air temperature sensor trouble	**5**-14
F12	Compressor intake temperature sensor trouble	**5**-14
F16	High-pressure sensor trouble	**5**-15
F17	Low-pressure sensor trouble	**5**-16
F23	Gas temperature sensor trouble at outdoor heat exchanger 2 (In)	**5**-13
F24	Liquid temperature sensor trouble at outdoor heat exchanger 2 (Out)	**5**-13
F25	Gas temperature sensor trouble at outdoor heat exchanger 3	**5**-13
F26	Liquid temperature sensor trouble at outdoor heat exchanger 3	**5**-13
F31	Outdoor unit non-volatile memory (EEPROM) trouble	**5**-16
H11	Constant speed compressor 2 overcurrent alarm	**5**-17
H12	Constant speed compressor 2 lock current alarm	**5**-17
H03	Compressor 1 CT sensor disconnected or short-circuit	**5**-18
H05	Compressor 1 discharge temperature sensor disconnected	**5**-18
H06	Low-pressure switch activated	**5**-19
H07	No-oil alarm	**5**-20
H08	Compressor 1 oil detection sensor (connection) trouble	**5**-20
H13	Compressor 2 CT sensor disconnected or short-circuit	**5**-18
H15	Compressor 2 discharge temperature sensor disconnected	**5**-18
H21	Compressor 3 overcurrent alarm	**5**-17
H22	Compressor 3 lock current alarm	**5**-17
H23	Compressor 3 CT sensor disconnected or short-circuit	**5**-18
H25	Compressor 3 discharge temperature sensor disconnected	**5**-18
H27	Compressor 2 oil detection sensor (connection) trouble	**5**-20
H28	Compressor 3 oil detection sensor (connection) trouble	**5**-20
H31	HIC trouble alarm	**5**-21
L04	Outdoor system address duplication	**5**-21
L10	Outdoor unit capacity not set	**5**-22
L11	Incorrect wiring of remote group control wiring (in case of shared solenoid valve kit)	**5**-22
L17	Outdoor unit model mismatch	**5**-23

4. 3-WAY Alarm Codes

P03	Compressor 1 discharge temperature trouble	**5**-24
P04	High-pressure switch activated	**5**-25
P05	Reverse phase (or missing phase) detected	**5**-25
P16	Compressor 1 (INV) overcurrent	**5**-26
P17	Compressor 2 discharge temperature trouble	**5**-24
P18	Compressor 3 discharge temperature trouble	**5**-24
P22	Fan motor trouble	**5**-26
P26	Inverter compressor high-frequency overcurrent alarm	**5**-26
P29	Inverter compressor missing phase or lock alarm	**5**-27

Blinking Inspection Display on the remote controller	CHECK blinking (1)	**5**-27
	CHECK blinking (2)	**5**-28

4. 3-WAY Alarm Codes

E06 Alarm

Alarm code	**E06**
Alarm meaning	Outdoor unit failed to receive serial communication signals from indoor unit.
Alarm conditions	Outdoor unit failed to receive serial communication signals from indoor unit.
Probable cause	(1) The indoor unit power was cut OFF after initial communications were completed. (2) An open circuit or short circuit occurred in the inter-unit control wiring after initial communications were completed.
Check	Check the power at the indoor and outdoor units, and check the inter-unit control wiring.
Correction	—
Example	—
Notes	This alarm is detected after initial communications are completed. Therefore, it does not occur in cases of “disconnected serial connector,” “no terminal unit set,” or other trouble that occurs before initial communications are completed. If initial communications have not been completed, alarm E04 occurs.

E12 Alarm

Alarm code	**E12**
Alarm meaning	Automatic address setting start is prohibited.
Alarm conditions	Automatic address setting was started when automatic address setting was in progress at another outdoor unit in the same link.
Probable cause	Automatic address setting is in progress at another outdoor unit.
Check	This alarm is not displayed on the remote controller. Therefore check the blinking on the outdoor unit PCB.
Correction	Wait for automatic address setting to be completed at the outdoor unit where it is currently in progress. Then start automatic address setting again.
Example	—
Notes	—

E15 Alarm

Alarm code	**E15**
Alarm meaning	Automatic address setting alarm (too few units)
Alarm conditions	The number of indoor units was too few when automatic address setting was performed.
Probable cause	(1) The number of indoor units set at the indoor unit quantity setting SW (S004, S005) on the outdoor unit PCB is too many. (2) The inter-unit control wiring between indoor units has been cut.
Check	(1) Refer to the test run servicing materials and check the indoor unit quantity setting SW (S004, S005). (2) Check the inter-unit control wiring at the indoor and outdoor units.
Correction	After correcting the indoor unit quantity setting or the inter-unit control wiring, perform automatic address setting again.
Example	—
Notes	3-WAY System switch position 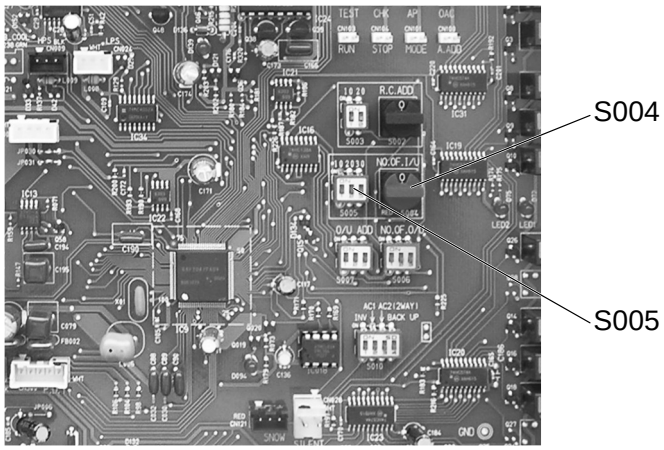

5

4. 3-WAY Alarm Codes

E16 Alarm

Alarm code	**E16**
Alarm meaning	Automatic address setting alarm (too many units)
Alarm conditions	The number of indoor units was too many when automatic address setting was performed. After initial communications were completed, an unrecognized unit was detected.
Probable cause	(1) The number of indoor units set at the indoor unit quantity setting SW (S004, S005) on the outdoor unit PCB is less than the number set. (2) The inter-unit control wiring is wired incorrectly.
Check	(1) Refer to the test run servicing materials and check the number of indoor units that is set. (2) Check the inter-unit control wiring at the indoor and outdoor units.
Correction	After correcting the indoor unit quantity setting or the inter-unit control wiring, perform automatic address setting again.
Example	—
Notes	—

E20 Alarm

Alarm code	**E20**
Alarm meaning	No indoor units at automatic address setting.
Alarm conditions	When automatic address setting was performed, no indoor units were recognized.
Probable cause	(1) The inter-unit control wiring from the outdoor unit to the indoor units has been cut. (2) Serial connector 1 (CN001) is disconnected at the outdoor unit. (3) The power is OFF at all indoor units in the system.
Check	(1) Check whether the inter-unit control wiring from the outdoor unit to the indoor units is cut. (2) Check whether serial connector 1 (CN001) is disconnected at the outdoor unit. (3) Check the power at the indoor units.
Correction	(1) Reconnect the inter-unit control wire from the outdoor unit to the indoor unit.
Example	—
Notes	Position of serial connector CN001 on 3-WAY System 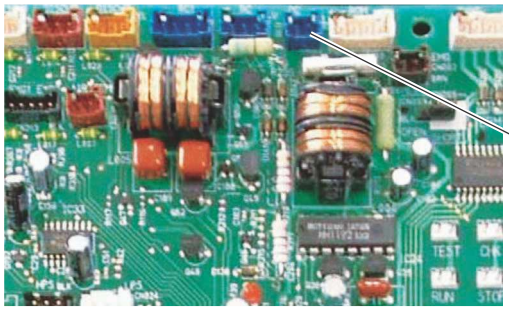

E24 Alarm

Alarm code	**E24**
Alarm meaning	Outdoor unit (INV) failed to receive communication from other outdoor unit (constant-speed).
Alarm conditions	After initial communications were completed, communications from an outdoor unit stopped.
Probable cause	(1) After initial communications were completed, the control wiring between main and sub outdoor units was cut. (2) After initial communications were completed, the outdoor unit power was turned OFF.
Check	—
Correction	—
Example	—
Notes	—

E25 Alarm

Alarm code	**E25**
Alarm meaning	Outdoor unit address setting failure (duplication)
Alarm conditions	Communication by outdoor unit main-sub control wiring was received that contained the same address as that unit 5 times or more within 3 minutes.
Probable cause	The unit number is set incorrectly.
Check	Check the unit number again.
Correction	Correct the incorrect unit number setting.
Example	—
Notes	Recovery from this alarm occurs automatically (when communication that contains the same address is not received for 3 minutes).

E26 Alarm

Alarm code	**E26**
Alarm meaning	Mismatch in outdoor unit quantity
Alarm conditions	After power initialization, the set outdoor unit quantity did not match the number of outdoor units detected on the outdoor unit main-sub control wiring for 3 minutes or longer.
Probable cause	(1) The outdoor unit quantity is set incorrectly. (2) The outdoor unit main-sub control wiring is cut.
Check	(1) Check the outdoor unit quantity setting again. (2) Check the outdoor unit main-sub control wiring.
Correction	(1) Correct the incorrect outdoor unit quantity setting. (2) Repair the outdoor unit main-sub control wiring.
Example	—
Notes	Recovery from this alarm occurs automatically (when the set outdoor unit quantity matches the number of outdoor units detected on the outdoor unit main-sub control wiring).

E29 Alarm

Alarm code	**E29**
Alarm meaning	Outdoor unit failed to receive communication from outdoor unit (main).
Alarm conditions	Outdoor unit communications from outdoor unit (main) were interrupted for 3 minutes or longer.
Probable cause	(1) After initial communications were completed, the outdoor unit main-sub control wiring was cut. (2) After initial communications were completed, the RC connector became disconnected. (3) The power at the outdoor unit (main unit) is turned OFF.
Check	(1) Check the outdoor unit main-sub control wiring. (2) Check the RC connectors. (3) Check the power at the outdoor unit (main).
Correction	(1) Repair the outdoor unit main-sub control wiring. (2) Correct the RC connector connection. (3) Turn ON the outdoor unit (main) power.
Example	—
Notes	—

F04, F05, F22 Alarm

Alarm code	**F04, F05, F22**
Alarm meaning	Compressor 1 discharge temperature sensor trouble, compressor 2 discharge temperature sensor trouble, Compressor 3 discharge temperature sensor trouble.
Alarm conditions	(1) Discharge temp. of 100℃ or higher was detected 20 minutes or more after that compressor stopped operating. (2) Discharge temp. of 80℃ or higher was detected after all compressors had been stopped for 60 minutes or longer. (3) A/D step is 10 steps or less (short circuit).
Probable cause	(1) Sensor malfunction • Sensor element malfunction • Sensor wiring is partially disconnected, resulting in increased electrical resistance. ☆This alarm does not occur when the wiring is cut or when the connector is not connected to the outdoor unit PCB. (2) Crossed wiring or installation error • The discharge temperature sensor of that compressor is connected to the discharge tube of the other compressor. • The connector for the discharge temperature sensor of the problem compressor is connected to the outdoor unit PCB connector for the other compressor. (3) Outdoor unit PCB failure (4) The check valve on the discharge tube for that compressor is wet. (5) An air short blockage in the area around the outdoor unit has increased the outdoor unit ambient temperature, reducing the cooling effects after the compressor stops. (6) There is a cause that results in P03, P17, or P02 alarm. (7) Electrical noise
Check	(1) Sensor malfunction and outdoor unit PCB failure Trouble: • Constantly indicates a high temperature. • When monitoring software or other means are used for monitoring, the discharge temperature at times fluctuates suddenly and wildly. • In some cases, the precise temperature may not be known, even when monitoring software is used. Check: • Wiggle the sensor and check whether the trouble continues. • Check whether the connector is partially disconnected from the PCB. ☆An F04 alarm will not result if the connector is completely disconnected (circuit is open). • If the cause is still uncertain, check the following to determine whether a sensor or PCB failure has occurred. Step 1: Connect the other compressor discharge sensor, or a discharge sensor where the F04 alarm has not occurred, to the connector for this compressor on the PCB. Measure the temperature at the same point (a location where temperature fluctuations are small), and check whether there is a temperature difference. Difference → A PCB or sensor failure is possible. No difference → PCB and sensor are normal. Step 2: If an abnormality was found at Step 1, connect the problem compressor sensor to the other compressor connector on the PCB, or to the PCB connector of a device where the F04 alarm has not occurred. Measure the temperature at the same point (a location where temperature fluctuations are small), and check whether there is a temperature difference. Difference → Sensor failure. No difference → PCB failure. ☆It is convenient at this time to have a discharge temperature sensor on hand. (2) Crossed wiring or installation error Trouble: Although the other compressor is operating and this compressor is stopped, the discharge temperature of the other compressor does not increase and the discharge temperature of this compressor rises. * The discharge temperature remains high immediately after the compressor stops. Wait for some time after the compressor stops and observe. Check: Check for crossed wiring and installation errors.

Continued

Check	(3) Leakage from the discharge tube check valve Trouble: Although the other compressor is operating and this compressor is stopped, the discharge temperature of this compressor rises together with the temperature of the other compressor. (4) The ambient temperature around the outdoor unit when it is stopped is 43 ℃ or higher. (5) If the cause is still unknown after checking the above, then it is possible that electrical noise is the cause of the trouble. It is necessary to provide a line filter or carry out other noise countermeasures.
Correction	(1) Replace the sensor. (2) Replace the outdoor unit PCB. (3) Carry out noise countermeasures. (4) Repair the refrigerant tubing. (5) Adjust the amount of refrigerant. (6) Correct the trouble.
Example	(1) Sensor wiring is partially cut.
Notes	This alarm does not indicate that the sensor is disconnected. In order to prevent overheating during operation, the outdoor units in this system will not allow a compressor to start if the discharge temperature does not decrease while the compressor is stopped. If a sensor malfunction results in continuous detection of a high discharge temperature, then the compressor may stop for no apparent reason. The purpose of this alarm is to facilitate identification of the problem in this case.

F06, F23, F25 Alarm

Alarm code	**F06, F23, F25**
Alarm meaning	Gas temperature sensor trouble at outdoor heat exchanger 1; Gas temperature sensor trouble at outdoor heat exchanger 2; Gas temperature sensor trouble at outdoor heat exchanger 3
Alarm conditions	(1) A/D step is 10 steps or less (short circuit). (2) A/D step is 1014 steps or more (open circuit).
Probable cause	(1) Sensor malfunction (including connector) (2) PCB malfunction
Check	(1) Measure the sensor resistance. Check that the sensor is operating normally. (2) Use a remote controller monitor or PC monitor to check the temperature that is recognized by the microcomputer.
Correction	—
Example	—
Notes	—

F07, F24, F26 Alarm

Alarm code	**F07, F24, F26**
Alarm meaning	Liquid temperature sensor trouble at outdoor heat exchanger 1; Liquid temperature sensor trouble at outdoor heat exchanger 2; Liquid temperature sensor trouble at outdoor heat exchanger 3
Alarm conditions	(1) A/D step is 10 steps or less (short circuit). (2) A/D step is 1014 steps or more (open circuit).
Probable cause	(1) Sensor malfunction (including connector) (2) PCB malfunction
Check	(1) Measure the sensor resistance. Check that the sensor is operating normally. (2) Use a remote controller monitor or PC monitor to check the temperature that is recognized by the microcomputer.
Correction	—
Example	—
Notes	—

4. 3-WAY Alarm Codes

F08 Alarm

Alarm code	**F08**
Alarm meaning	Outdoor air temperature sensor trouble
Alarm conditions	(1) A/D step is 10 steps or less (short circuit). (2) A/D step is 1014 steps or more (open circuit)
Probable cause	(1) Sensor malfunction (including connector) (2) PCB malfunction
Check	(1) Measure the sensor resistance. Check that the sensor is operating normally. (2) Use a remote controller monitor or PC monitor to check the temperature that is recognized by the microcomputer.
Correction	—
Example	—
Notes	—

F12 Alarm

Alarm code	**F12**
Alarm meaning	Compressor intake temperature sensor trouble
Alarm conditions	(1) A/D step is 10 steps or less (short circuit). (2) A/D step is 1014 steps or more (open circuit)
Probable cause	(1) Sensor malfunction (including connector) (2) PCB malfunction
Check	(1) Measure the sensor resistance. Check that the sensor is operating normally. (2) Use a remote controller monitor or PC monitor to check the temperature that is recognized by the microcomputer.
Correction	—
Example	—
Notes	—

F16 Alarm

Alarm code	**F16**
Alarm meaning	High-pressure sensor trouble (abnormal rise in high pressure) (In some cases this may not be the result of a high-pressure sensor malfunction.)
Alarm conditions	• High-pressure SW activated although the detected pressure was lower (3.03 MPa or below) than the high-pressure SW activation pressure: Undershift • High-pressure SW failed to activate although the detected pressure was higher (3.43 MPa or above) than the high-pressure SW activation pressure: Overshift • The saturation temperature at the detected pressure is 5℃ or more below the highest indoor-unit E1 temperature continuously for 30 minutes. • High-pressure sensor disconnected or open circuit.
Probable cause	(1) High-pressure sensor malfunction (2) Failure to connect the connector to the outdoor unit PCB (3) Failure to open the service valve (4) Clogged tubing (5) Valve leakage (6) Over-charging (7) Outdoor unit PCB failure (8) Electrical noise
Check	(1) High-pressure sensor failure • Check the sensor resistance value. (Use a tester and measure the resistance between sensor No. 1 and No. 3) Resistance of less than 10kΩ indicates a short circuit or other trouble. Resistance of 10kΩ - 200kΩ is normal. Resistance of more than 200kΩ indicates an open circuit or other trouble. • Connect a gauge to the high-pressure outlet and check for changes in the value dispalyed by the monitoring software, and for large deviation of the gauge pressure. • During heating, check whether the temperature is lower than the highest indoor-unit E1 temperature. * The pressure detected by the high-pressure sensor is the highest pressure in the system. Therefore during heating the converted saturation temperature will never be lower than any indoor-unit E1 temperature. During cooling this temperature will never be lower than the outdoor unit liquid temperature. (2) Failure to open the service valve, clogged tubing, valve leakage, over-charging. In all of these cases an alarm occurs when there are rapid pressure fluctuations and tracking of the detected pressure is poor. • Check the open/closed status of the valve. • Check for clogging of the tubing. To check for clogging, disconnect the high-pressure sensor from the PCB and check whether the high-pressure SW activates. • Check for valve leakage and over-charging When valve leakage or over-charging occurs, refrigerant is likely to accumulate in the outdoor units or indoor units, resulting in a sudden rise in pressure at start that occurs before the refrigerant in the heat exchanger is discharged. * The representative valves to check are the liquid valves and mechanical valves. (3) Outdoor unit PCB failure • The check items are the same as for a high-pressure sensor malfunction. A normal PCB is needed to determine whether the problem is a PCB failure or a pressure sensor malfunction. If an abnormality was found at the check items for a high-pressure sensor malfunction, first try replacing the PCB and check again. Trouble is corrected: Outdoor unit PCB failure Trouble is not corrected: High-pressure sensor malfunction

Continued

Correction	(1) Replace the high-pressure sensor. Caution: Because the high-pressure sensor connection employs a Schrader-type valve, it can be removed and replaced. However, the high-pressure sensor can be easily damaged by high voltage; therefore use sufficient caution with regard to static electricity. (2) Replace the PCB. (3) Correct the locations of problems in the refrigeration cycle. • Correct locations where clogging or leakage has occurred. • In the case of over-charging, recover refrigerant. (Adjust the amount of refrigerant). ⁎ Guide for over-charging Be sure to connect the gauge to the high-pressure outlet when checking for over-charging. During cooling: The following does not apply when outdoor air temperature is low or when fan speed is controlled. When both compressor 1 and compressor 2 are operating, and the fan mode is 14 (maximum fan speed), then the high pressure saturation temperature should be approximately 15℃ above the outdoor air temperature. If it is 5℃ or more above this level, then it is possible that over-charging may have occurred. During heating: There is an indoor unit where refrigerant flow is poor (E1 temperature and discharge temperature are low), and the mechanical valve of that unit is opened to 300 pulses or more, and the E1 temperature is close to room temperature. However be aware that this kind of data results often when there is a height difference between indoor units. Reducing the amount of refrigerant will improve the refrigerant flow, however reducing it too much will increase the likelihood of alarms related to low oil level (scroll-side), the low pressure SW, and discharge temperature. Use caution.
Example	This alarm may result when the service valve is closed or when valve leakage (particularly from the mechanical valve) occurs.

F17 Alarm

Alarm code	**F17**
Alarm meaning	Low-pressure sensor trouble
Alarm conditions	(1) Sensor short circuit (2) Sensor open circuit
Probable cause	(1) Sensor malfunction (including connector) (2) PCB malfunction
Check	(1) Measure the sensor resistance. Check that the sensor is operating normally. (2) Use a remote monitor or a PC monitor to check the temperature that is recognized by the microcomputer.
Correction	—
Example	—
Notes	—

F31 Alarm

Alarm code	**F31**
Alarm meaning	Outdoor unit non-volatile memory (EEPROM) trouble
Alarm conditions	(1) Non-volatile memory is not present when power initialization occurs. (2) Read values do not match after writing to non-volatile memory is complete.
Probable cause	(1) Memory was not inserted after the PCB was replaced. (2) The lifetime of the non-volatile memory has been reached. (3) Non-volatile memory is installed incorrectly (wrong direction, bent pins, etc.).
Check	(1) Check the non-volatile memory on the PCB.
Correction	—
Example	—
Notes	—

H11, H12, H21, H22 Alarm

Alarm code	**H11, H12, H21, H22**
Alarm meaning	H11: Constant speed compressor 2 overcurrent alarm H12: Constant speed compressor 2 lock current alarm H21: Constant speed compressor 3 overcurrent alarm H22: Constant speed compressor 3 lock current alarm
Alarm conditions	Hx1: During operation, the compressor current value exceeded 20 A for 30 seconds or longer. However this alarm is not detected for 4 seconds after the compressor starts. Hx2: During operation, the compressor current value exceeded 29 A for 4 seconds or longer. However this alarm is not detected for 2 seconds after the compressor starts.
Probable cause	(1) Compressor failure (locked or partially locked) (2) CT circuit failure (including cut wiring) (3) Missing power phase (4) Low power voltage (5) PCB failure
Check	(1) Compressor failure (partially locked) Trouble: Current value during operation greatly exceeds the value shown above. Check: When the current for each phase is measured with a clamp meter or similar instrument, check that the current value for all phases is not high. If MG was forced ON (use caution), check that compressor noise will not occur or the compressor will not run with a groaning sound. (2) CT circuit failure, PCB failure Trouble: Check: • Check for poor connector contact. • Check the continuity of the CT circuit. • Install a normal CT in place of this CT and check. If current is detected, then the PCB can be judged OK. →CT circuit failure • Check that current is flowing in the phase where the CT circuit is connected. →Check voltage and current. (3) Missing power phase Trouble: This alarm primarily occurs when the T-phase is missing. When the R-phase or S-phase is missing, CT trouble or PCB continuity trouble occur. However this may not be true in the case of a missing phase caused by magnet SW trouble. Check: There is the possiblility of a magnet SW failure. Therefore, check the phase voltage at a location that is as close to the compressor as possible. (4) Low power voltage Trouble: In most cases, this occurs when another constant-speed compressor (including compressors in other units) or other device starts. It also occurs when the power wiring is extremely long. Check: Check the voltage between each of the phases. However if this trouble occurs when other devices or compressors start, then an oscilloscope is required. (5) PCB failure Trouble: Check: Check that the current value measured with the clamp meter is not lower than the value measured with the PC or remote controller. (6) If the cause is still unknown after checking the above, then it is possible that noise is the cause of the trouble. It is necessary to connect a PC or other instrument.
Correction	(1) Replace the compressor. (2) Replace the CT circuit. (3) Repair the power circuit. (4) Adjust the primary-side power. Repair the power wiring. (5) Replace the outdoor unit PCB. (6) Correct the trouble. * In the case of a compressor failure, it is likely that steps must be taken to correct the cause of the compressor failure (such as liquid back-up) in order to prevent recurrence. Be sure to check that there is no cause which may resuit in compressor locking.
Example	—

H03, H13, H23 Alarm

Alarm code	**H03, H13, H23**
Alarm meaning	Compressor 1 CT sensor disconnected or short-circuit; Compressor 2 CT sensor disconnected or short-circuit; Compressor 3 CT sensor disconnected or short-circuit
Alarm conditions	Compressor 1: Current value of more than 18.0 A is detected while the compressor 1 is stopped. Compressor 2 & 3: Current value at compressor 2 and 3 is less than 2.0 A when 2 seconds or more had passed after the compressors began operation and output. * No current is detected even though the compressors are operating.
Probable cause	(1) CT circuit failure (including cut wiring, etc.) (2) Disconnected CT circuit connector (3) Missing phase where CT circuit is connected (4) This CT circuit is connected to the connector of the other CT circuit. (5) PCB failure (6) Electrical noise
Check	(1) CT circuit failure, PCB failure Trouble: • Current value during compressor operation is below the threshold value. Check: • Check that the connector is not disconnected. • Check the continuity of the CT circuit. • Install a normal CT in place of this CT and check. If current is detected, then the PCB can be judged OK. →CT circuit failure • Check that current is flowing in the phase where the CT circuit is connected. →Check voltage and current. (2) Crossed wiring or installation error Trouble: When the compressor is stopped, the current value at the other compressor is high. ☆When this type of condition occurs, seizing-detection control takes priority. (3) If the cause is still unknown after checking the above, then it is possible that noise is the cause of the trouble. It is necessary to connect a PC or other instrument.
Correction	(1) Replace the CT circuit. (2) Replace the outdoor unit PCB. (3) Correct the problem.
Example	(1) The connector was not inserted after the PCB was replaced.
Notes	Use a normal CT as a tool to determine whether the trouble is a PCB failure or CT failure.

5

H05, H15, H25 Alarm

Alarm code	**H05, H15, H25**
Alarm meaning	Compressor 1 discharge temperature sensor disconnected; Compressor 2 discharge temperature sensor disconnected; Compressor 3 discharge temperature sensor disconnected
Alarm conditions	• This alarm occurs when the discharge sensor temperature detector is not inserted into the tube's sensor holder, or when the sensor itself has suffered some kind of malfunction other than a cut wire. • When outdoor air temperature is 4℃ or higher: Alarm occurs if the temperature detected by the discharge sensor has changed by less than 2℃ when the compressor has operated for 10 minutes immediately after start. • When outdoor air temperature is below 4℃: Alarm occurs if the temperature detected by the discharge sensor has changed by less than 2℃ when the compressor has operated for 30 minutes immediately after start.
Probable cause	(1) Discharge sensor temperature detector is not inserted into the tube's sensor holder. (2) Discharge sensor itself has suffered some kind of malfunction other than a cut wire.
Check	(1) Check that the discharge temperature sensor is inserted into the sensor holder. (2) Check that sufficient heat-conducting putty is applied. (3) Remove the discharge sensor from the sensor holder and expose the sensor to the outside air for approximately 5 minutes. Check that the temperature detected by the sensor changes to match the outside air temperature. (However the sensor cannot detect temperatures at or below 0 ℃.)
Correction	(1) Install the sensor into the holder, and apply sufficient heat-conducting putty. (2) If the sensor is malfunctioning, replace it.
Example	
Notes	The discharge temperature sensor is generally a sensor intended for accurate detection of high temperatures. Therefore, it will not accurately detect the temperature if the temperature at the measurement point is 20 ℃ or below.

H06 Alarm

Alarm code	**H06**
Alarm meaning	Low pressure switch activated
Alarm conditions	A report occurs during A/C operation when the low-pressure sensor installed at constant low-pressure parts detects a pressure of 0.05 MPa or less continuously for 2 minutes, or an instantaneous pressure of 0.02 MPa or less. (These values represent abnormal low pressure which may damage the compressor.) However, the alarm does not actually occur the first 2 times that the above operation takes place. At these times, the outdoor unit is stopped and the conditions are monitored. The alarm occurs when the above operation occurs for the fifth time. The first 4 times before the alarm occurs are called “pre-trip.” After pre-trip occurs, if the low-pressure sensor detects a pressure of 0.15 MPa or more for 3 minutes of continuous operation, the pre-trip count is reset to 0. If the low-pressure sensor detects a pressure of 0.16 MPa or less continuously for 30 minutes when the compressor is stopped, an alarm occurs immediately (no pre-trip).
Probable cause	The A/C unit low pressure has dropped to a level that does not occur under ordinary conditions. (1) The absolute amount of gas in the system is too low (as a result of insufficient refrigerant charge or leak). (2) The refrigerant has accumulated in the circuit and has not returned to the compressor. Refrigerant has accumulated in a location of one-way flow and cannot escape. High-pressure level is low, resulting in poor flow of refrigerant in the circuit. (A lower high-pressure level results in a smaller difference between low pressure and high pressure, that may be insufficient to cause refrigerant flow.) (3) The refrigerant circuit has become closed, and refrigerant has not returned to the compressor. In some cases when moisture enters the refrigerant circuit, it can freeze at the low-pressure locations and the resulting ice can block the circuit. ☆If the alarm occurs when there is sufficient refrigerant in the system ((1) and (3)), liquid refrigerant has definitely accumulated somewhere in the system. Liquid refrigerant generally accumulates in high-pressure locations. In this case the high pressure gradually increases (however it may not increase if the location where the liquid accumulates is sufficiently large). Depending on the refrigerant saturation temperature, it may also accumulate in low pressure locations. In this case the high pressure is unlikely to increase. (4) The wiring from the solenoid valve kit is actually connected to the different indoor unit. (5) The system is that the multiple indoor units are connected at only one solenoid valve kit and also multiple remote controllers are connected. "Installation of the common use solenoid valve kit" from a PC has not been made.
Check	(1) Check that the service valve is open. (2) Check that none of the valves (solenoid valves, mechanical valves) in the main refrigerant circuit is closed due to an operation failure. (3) Check that there is no possibility of foreign objects or water having entered the refrigerant circuit. (4) Check that valve leakage at a stopped sub unit has not resulted in accumulation of refrigerant at that sub unit. (5) Check that no refrigerant leakage has occurred. (6) Check whether the wiring from the solenoid valve kit is actually connected to the different indoor unit or not. (7) The system is that the multiple indoor units are connected at only one solenoid valve kit and also multiple remote controllers are connected. Check whether "installation of the common use solenoid valve kit" from a PC has been made or not. (Confirmation from the address setting software of a PC)
Correction	(1) If there was a valve operation failure, in general it is necessary to replace the valve. (2) If a foreign object or moisture has entered the circuit, install a strainer or dry core (depending on the degree of the problem). (3) If refrigerant has leaked into stopped sub units, it is likely that valve leakage has occurred. The valve must be replaced.
Example	
Notes	

H07 Alarm

Alarm code	**H07**
Alarm meaning	No-oil alarm
Alarm conditions	This alarm occurs when oil does not flow for a specified amount of time in tubing where oil flow constantly. (The presence of oil is detected by a temperature sensor.) Judgment method: Tcal (calculated by the formula below from the oil temperature) is compared with the discharge temperature. If Tcal is higher than the discharge temperature then oil is judged to be present. If Tcal is lower than the discharge temperature, oil is judged to be not present. $Tcal=\{(0.0254 \cdot T_oil \cdot LP^2 +0.0298 \cdot T_oil \cdot LP +0.8842 \cdot T_oil -2.9953 \cdot LP^2 -11.091 \cdot LP +436.94) +2.9953 \cdot HP^2 +11.091 \cdot HP -436.94\}/(0.0254 \cdot HP^2 +0.0298 \cdot HP +0.8842)$ 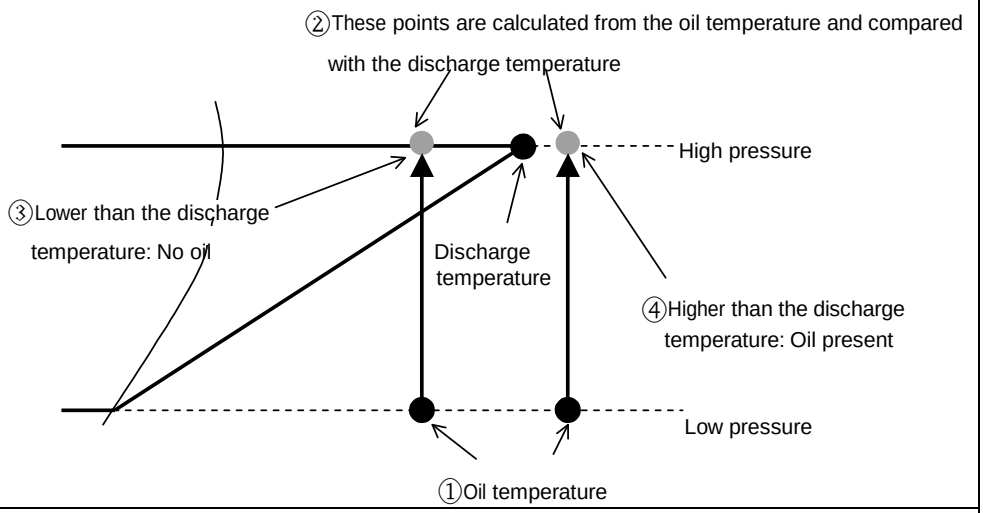
Probable cause	Insufficient amount of oil in the system (1) The length of system tubing exceeds the allowable tubing length. (2) The difference in height between system units exceeds the allowable value. (3) A large amount of oil was drained when a compressor was replaced. (4) Oil has accumulated in a stopped outdoor unit and has not returned, as a result of refrigerant circuit clogging or valve leakage at the stopped outdoor unit. (5) A valve (ORVR, BALV, BPB) in the oil circuit has malfunctioned, or there is clogging of the circuit (capillaries) which returns oil from the oil separator to the compressor. (6) If an excessive amount or liquid returns to the compressor, oil foaming may increase oil discharge. The same occurs when the refrigerant proportion in the compressor is high at start, due to an open circuit in the crank case heater. (7) Oil sensor disconnected or open circuit
Check	(1) Check the tubing length and height differences. (2) Check the operation of system circuit valves. (3) Check that there is not an excessive amount of liquid return. (Check that there is no mechanical valve leakage.) (4) Check the crank case heater (wintertime). (5) Check that the oil sensor is not disconnected, and that the circuit is not open.
Correction	(1) If insufficient oil is a possibility, then charge with additional oil. (2) If it is clear that a valve failure has occurred, replace the valve.
Example	
Notes	

H08, H27, H28 Alarm

Alarm code	**H08, H27, H28**
Alarm meaning	Trouble (open circuit) with the oil sensor (connection) at compressor 1, compressor 2, or compressor 3
Alarm conditions	This alarm occurs when a connector connection (pins 1 and 2 for compressor 1, pins 4 and 5 for compressor 2, and pins 7 and 8 for compressor 3) is open.
Probable cause	Disconnected connector
Check	Check that the connector is securely connected.
Correction	(1) Connect the connector. (2) Correct the connection at connector pins 4 and 5.
Example	—
Notes	

4. 3-WAY Alarm Codes

H31 Alarm

Alarm code	**H31**
Alarm meaning	HIC trouble alarm
Alarm conditions	This alarm occurs when the microcomputer identifies a trouble signal (indicating abnormal HIC temperature or other trouble) from the HIC. The HIC judges the current and temperature, and outputs the trouble signal. In general this indicates trouble with the HIC itself.
Probable cause	Overcurrent in HIC circuit, and the resultant abnormal heating, caused by HIC failure
Check	Check the power wiring and connector wiring. If the wiring and connectors are normal, use a tester to measure the resistance between the compressor HIC power (HIC+) and ground (HIC–). If there is a short circuit, there is an HIC malfunction. 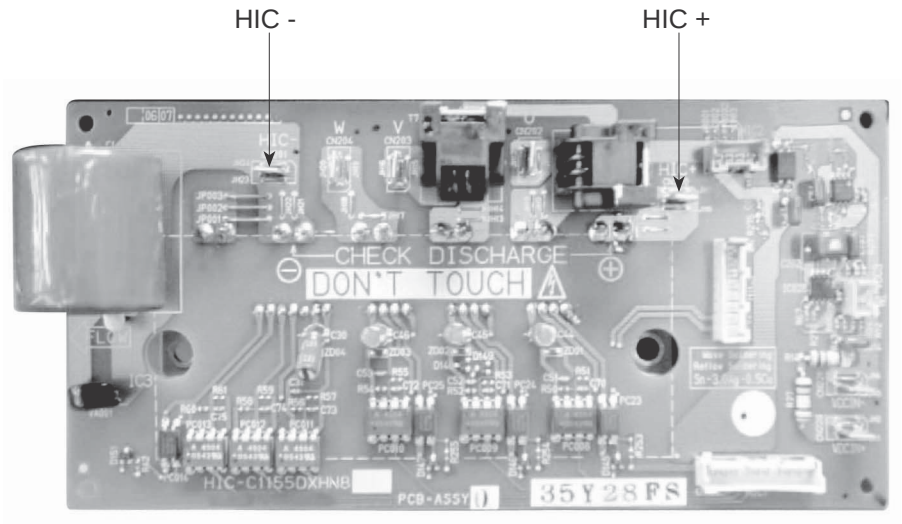 **HIC PCB**
Correction	If an HIC failure is found, replace the PCB.
Example	—
Notes	Turn OFF the power, and check the continuity of HIC+ and HIC– on the HIC PCB.

L04 Alarm

Alarm code	**L04**
Alarm meaning	Outdoor system address duplication
Alarm conditions	Communication by inter-unit control wiring was received that contained the same address as that unit 5 times or more within 3 minutes.
Probable cause	Incorrect outdoor system address settings
Check	Check the system address settings again.
Correction	Correct the system address settings.
Example	—
Notes	Recovery from this alarm occurs automatically (when communication that contains the same address as that unit is not received for 3 minutes after detection).

4. 3-WAY Alarm Codes

L10 Alarm

Alarm code	**L10**
Alarm meaning	Outdoor unit capacity not set
Alarm conditions	The outdoor unit capacity has not been set, or the setting is not allowed by the system.
Probable cause	This alarm occurs because the capacity has not been set.
Check	Connect the outdoor unit maintenance remote controller. On the outdoor unit EEPROM detailed setting mode screen, check the value for the outdoor unit capacity (item code 81). Check that it is not set to “0” or to a capacity that is not allowed.
Correction	If item code 81 is incorrect, use the outdoor unit maintenance remote controller and set it correctly. * After changing the setting, be sure to reset both the indoor and outdoor power.
Example	—
Notes	The outdoor unit maintenance remote controller is required in order to set the capacity in the outdoor unit EEPROM.

L11 Alarm

Alarm code	**L11**
Alarm meaning	Installation or connection failure in a common use solenoid valve kit, miswiring of indoor unit's remote control group
Alarm conditions	(1) The connection system with the multiple indoor units at only one solenoid valve kit and installation failure of "common use solenoid valve kit" * "L11" alarm occurs in the same series of all remote controllers. (2) The connection system with the multiple indoor units at only one solenoid valve kit and wire connection that is not allowed * "L11" alarm occurs at the only target indoor unit. (3) Remote control group wiring with a different refrigerant circuit's indoor unit * "L11" alarm occurs at the only target indoor unit.
Probable cause	(1) Installation failure of "common use solenoid valve kit" (setting from PC at test run operation) and address setting is not made in the same series of all indoor units. (2) Wiring shown below that are not allowed ① "Remote control group wiring with a different solenoid valve kit connected to the indoor unit 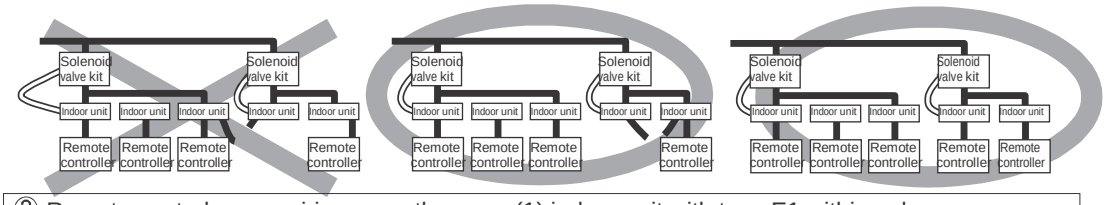 ② Remote control group wiring more than one (1) indoor unit with type E1 within only one solenoid valve kit 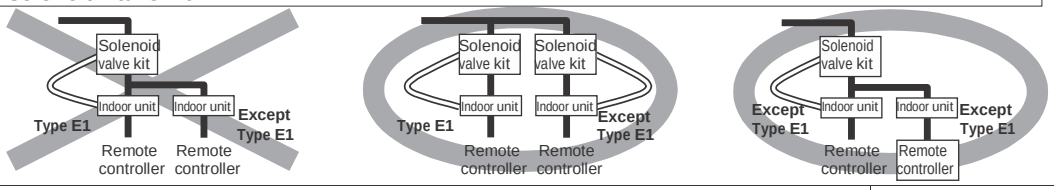 ③ Remote control group wiring with a different refrigerant circuit in the indoor unit
Check	(1) When setting "installation of common use solenoid valve kit" is made by PC, check whether the installation change was made in the same series of all indoor units or not. (Check the software of address setting of PC.) * In this case, "L11" alarm occurs at all indoor units' remote controllers. (2) Check the condition of remote control group wiring where "L11" alarm occurs. Check whether the group wiring is made with the indoor unit of a different solenoid valve kit or not. Check whether the group wiring is made with the indoor unit of a different refrigerant circuit or not. (3) Check the model of indoor unit connected to a remote control group where "L11" alarm occurs. Check whether type E1 indoor units are connected in the group wiring or not. * Check the model of indoor unit with the item code 10 for the detailed setting of the remote control.
Correction	(1) Perform "installation of common use solenoid valve kit" from PC in the same series of all indoor units. (2) With a common use solenoid valve kit, change into the wiring that is allowed.
Example	—
Notes	This alarm may occasionally occur when connecting the common use solenoid valve kit.

L17 Alarm

Alarm code	**L17**
Alarm meaning	Outdoor unit model mismatch
Alarm conditions	This alarm occurs when a unit other than R410A refrigerant model is connected.
Probable cause	(1) A unit that uses R407C refrigerant, or a R22 model unit, was connected by mistake. (2) The connected unit is correct, however the refrigerant type setting in the outdoor unit EEPROM (item code 80) is incorrect.
Check	(1) Check the refrigerant type at the connected unit. (2) Use the outdoor unit maintenance remote controller and check the item code 80 refrigerant type. If the setting is incorrect, change it to R410A.
Correction	—
Example	—
Notes	The outdoor unit's maintenance remote controller is required in order to set the refrigerant type in the outdoor unit EEPROM.

P03, P17, P18 Alarm

Alarm code	**P03, P17, P18**
Alarm meaning	Compressor 1 discharge temperature trouble; Compressor 2 discharge temperature trouble; Compressor 3 discharge temperature trouble
Alarm conditions	Inverter compressor 1: Temperature is 105℃ or high er and pre-trip stop has occurred. Compressors 2, 3 (constant speed): Pre-trip stop occurs at 105℃ or above. The alarm occurs when pre-trip stop occurs more than once. However the pre-trip counter is cleared if the compressor operates continuously for a specified length of time.
Probable cause	(1) Clogging of liquid valve capillaries (2) Insufficient amount of refrigerant (including trouble resulting from an insufficient initial charge and from gas leakage) (3) Blocking of low-pressure parts caused by intrusion of foreign objects (moisture, scale, etc.) (4) Crossing (tubing or PCB connectors) with the other compressor thermistor (5) Expansion valve operation failure (6) Accumulation of refrigerant at stopped outdoor units (7) Compressor discharge sensor failure (8) PCB failure (A/D conversion failure) (9) Electrical noise
Check	(1) Clogging of capillaries Trouble: Compressor discharge temperature does not decrease even when the liquid valve is ON. Check: When the liquid valve is operating and the liquid valve is ON, check that the secondary side of the liquid capillaries is cold. (2) Insufficient refrigerant Trouble: Liquid effectiveness is poor. Check: Check whether or not the superheating temperature is declining if the evaporator mechanical valve is opened to 300 pulses or more (after checking for foreign object intrusion). (3) Foreign object intrusion Trouble: Liquid valve effectiveness is poor. Check: Check that there is no difference in the condensation or frost conditions between the strainer primary-side and secondary-side tubing. (4) Crossed thermistor Trouble: The discharge temperature of the other compressor is high although only this compressor is operating. When the liquid valve turns ON, the discharge temperature of the other compressor decreases. (5) Accumulation of refrigerant in stopped outdoor units Trouble: • System is OK when all outdoor units are operating, however symptoms of insufficient gas occur when a certain outdoor unit is stopped. • Condensation or frost is visible up to the top of the accumulator of the stopped outdoor unit. • After an outdoor unit stops, there is the sound of refrigerant flowing into an outdoor unit that was stopped for a long time. • When an outdoor unit starts after being stopped for a long time, the start is accompanied by much vibration. Check: • Representative parts include the liquid capillaries (secondary side of capillaries will be cool during cooling operation), mechanical valve, mechanical valve bypass check valve (sound of refrigerant flow can be heard, and stops when the liquid valve is closed), hot gas defrost valve (if valve secondary side remains hot even after much time has passed, be careful not to mistake transmitted heat for a valve failure). • Ice is growing on the lower parts of some outdoor unit heat exchangers but not on others. ☆ Because this trouble may occur even in outdoor units with a high operating rate under conditions of insufficient gas, caution is needed. (6) Sensor failure Check: • This alarm is likely to occur when wiring is partially cut. (It is difficult to identify, even when continuity is checked.) The detected discharge temperature is high. • Although such conditions rarely occur, a P02 alarm is likely if the detected discharge temperature is low. • Replace the sensor with another discharge sensor and compare the temperature conditions. (7) If the cause is still unknown after checking the above, then it is possible that electrical noise is the cause of the trouble.
Correction	(1) Replace the sensor. (2) Replace the outdoor unit PCB. (3) Correct the problem locations.
Example	All of the probable causes
Notes	Operates continuously for a set length of time. Indicates 2.5 minutes or longer for an inverter unit and 30 seconds or longer for a constant-speed compressor.

4. 3-WAY Alarm Codes

P04 Alarm

Alarm code	**P04**
Alarm meaning	High-pressure switch activated.
Alarm conditions	The operation of the electronic circuit in the high-pressure switch may short-circuit the terminal depending on the pressure. A pressure of 3.3 MPa or above will short-circuit the terminal. Once the terminal is short-circuited, it will remain in that state until the pressure goes below 2.6 MPa.
Probable cause	(1) Failure of the check valve in the compressor discharge tube. (2) The service valve is closed. (3) Clogging of the outdoor heat exchanger during cooling. (4) An air short in the outdoor unit during cooling. (5) Failure of the outdoor fan during cooling. (6) Clogging of the air filter in the indoor unit during heating. (7) An air short in the indoor unit during heating. (8) Failure of the indoor fan during heating. (9) Clogging of the refrigerant circuit. (10) Failure of the mechanical valve. (11) Failure of the solenoid valve kit. (12) Too much refrigerant has been charged. (13) Failure of the high-pressure switch. (14) The wiring from the solenoid valve kit is actually connected to the different indoor unit. (15) The system is that the multiple indoor units are connected at only one solenoid valve kit and also multiple remote controllers are connected. "Installation of the common use solenoid valve kit" from a PC has not been made.
Check	(1) Make sure that the high-pressure switch connector has been properly connected. (2) If the high-pressure switch is properly connected, connect a high-pressure gauge to the high-pressure outlet port and monitor the pressure during operation to check the pressure when the high-pressure switch is activated. Check valve failure is likely if the pressure is less than 3.3 MPa. The following describes checks to be made when the pressure is high. (3) During cooling, check whether the outdoor unit heat exchanger is clogged. Remove any foreign material that prevents ventilation. (4) During cooling, check whether an air short blockage has occurred in the outdoor unit. The system is operating normally unless the temperature around the outdoor unit is excessively high. (5) During cooling, check for outdoor fan failure. Check whether the screws securing the fan are loose and whether the fan connector in the outdoor unit PCB is properly connected. (6) During heating, check whether the air filters in the indoor unit are clogged. If clogged, clean the filters. (7) During heating, check whether an air short blockage has occurred in the indoor unit. The system operates normally unless the temperature around the indoor unit is excessively high. (8) During heating, check for indoor fan failure. (9) Check whether the refrigerant circuit is clogged. Check that all service valves are closed. Check whether welded locations are clogged. (10) Check for mechanical valve failure. Check whether the mechanical valves make a clattering sound when the power is reset. Since the mechanical valve in the indoor unit is in a location that makes aural inspection difficult, use an electric means to check. Check that the connector pin of the mechanical valve on the PCB outputs 4 V. In addition, check that the coil resistance of the mechanical valve is several tens of Ohm (Ω). (11) Check for solenoid valve kit failure. Removing a coil that is on will result in a clicking sound. Also, removing a coil that is off will not produce such a sound. (12) Check whether too much refrigerant has been charged. Too much refrigerant has been charged if the sub-cool temperature of the condenser is 15℃ or more. (13) Check whether the wiring from the solenoid valve kit is actually connected to the different indoor unit or not. (14) The system is that the multiple indoor units are connected at only one solenoid valve kit and also multiple remote controllers are connected. Check whether "installation of the common use solenoid valve kit" from a PC has been made or not. (Confirmation from the address setting software of a PC)
Correction	Replace damaged components and correct the amount of charged refrigerant.
Example	—
Notes	—

P05 Alarm

Alarm code	**P05**
Alarm meaning	Reverse phase (or missing phase) detected
Alarm conditions	This alarm occurs when a reverse phase or missing phase is detected in the R-S-T phases.
Probable cause	Reverse phase or missing phase in the R-S-T phases
Check	Check the wiring at the power terminal plate.
Correction	Switch the phases and reinsert. Check if the result is OK.
Example	—
Notes	—

4. 3-WAY Alarm Codes

P16 Alarm

Alarm code	**P16**
Alarm meaning	Compressor 1 (INV) overcurrent alarm
Alarm conditions	This alarm occurs when current trouble or current detection trouble occur at an inverter frequency of less than 80 Hz after start (when trouble judgment current is detected in the primary or secondary current, or when an instantaneous secondary current of 48 A or higher is detected.
Probable cause	There is a strong possibility of a compressor failure. An alarm occurs for current detection trouble when it is judged that no current is flowing after start (DCCT is damaged). In this case, the cause is a DCCT failure.
Check	Check the power wiring and connector wiring.
Correction	It is possible to resolve this trouble by limiting the maximum frequency.
Example	—
Notes	—

P22 Alarm

Alarm code	**P22**
Alarm meaning	Fan motor trouble
Alarm conditions	Fan motor start failure, fan motor Hall IC input failure
Probable cause	Possible causes are a Hall IC input circuit failure and a fan HIC failure.
Check	Check the fan motor wiring, the Hall IC wiring, and the connector connections. If the wiring and connectors are normal, then check that the capacitor of the Hall IC input circuit is securely soldered onto the PCB. Also use a tester and measure the resistance between fan HIC power (HIC+) and ground (HIC–). If there is a short circuit, there is an HIC malfunction. 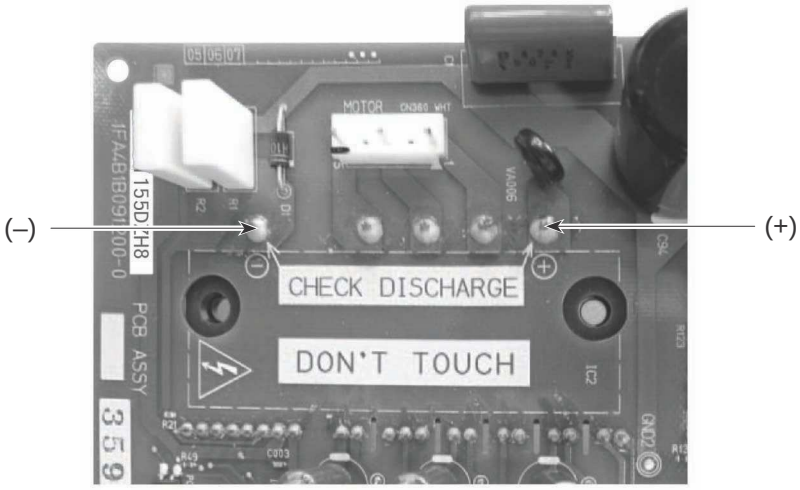 **Fan circuit on the outdoor unit control PCB** * In the 3-WAY SYSTEM, the fan circuit PCB is integrated with the outdoor unit PCB.
Correction	If the fan does not start, the below corrections may be effective. (1) If there is a fan HIC failure or circuit failure, replace the PCB. (2) If the fan motor is locked, replace the fan motor.
Example	—
Notes	Turn OFF the power, and check the continuity of “+” and “–” on the fan circuit PCB.

P26 Alarm

Alarm code	**P26**
Alarm meaning	Inverter compressor high-frequency overcurrent alarm
Alarm conditions	This alarm occurs when current trouble or current detection trouble occurs at an inverter frequency of 80 Hz or higher after start (when trouble judgment current is detected in the primary or secondary current, or when an instantaneous secondary current of 48 A or higher is detected).
Probable cause	The detection methods are the same as for P16. However the fact that operation up to high frequencies is possible does not necessarily mean that a compressor failure is the cause of the trouble. Start the compressor several times. If alarm P26 occurs every time and alarm P16 does not occur at all, then the possibility of a compressor failure is low.
Check	Check the power wiring and connector wiring.
Correction	It is possible to resolve this trouble by limiting the maximum frequency.
Example	—
Notes	—

P29 Alarm

Alarm code	**P29**
Alarm meaning	Inverter compressor missing phase or lock alarm
Alarm conditions	This alarm may occur at start, and occurs when missing phase or lock is detected, and when a DCCT failure occurs.
Probable cause	Generally this alarm occurs when the refrigerant pressure balance is uneven at start, or when inverter compressor lock occurs, there is a missing phase in the inverter compressor wiring, or a DCCT failure occurs. This can be judged to be starting trouble which is not caused by HIC.
Check	Check the power wiring and connector wiring.
Correction	DCCT failure (replace PCB) or compressor failure
Example	—
Notes	Use a tester to measure the voltage between the DCCT output terminal on the rear of the PCB and the ground. If the voltage is not within 2 – 3 V, then the DCCT has malfunctioned.

CAUTION Currently the blinking inspection display can be displayed only on the wired remote controller and system remote controller.

Blinking inspection display (1) (Automatic backup)

Alarm code	**(Blinking inspection display)**
Alarm meaning	Automatic backup is in progress. A/C units can be operated. Status: The compressor at one of the outdoor units where the outdoor unit fan is running should be operating. * Blinking inspection display also occurs when seizing of the compressor magnet SW is detected. Because this may also be the case, refer to “Blinking inspection display (compressor magnet SW seizing detection).”
Alarm conditions	When alarm P16, P22, P26, P29, Hx1, Hx2, or H31 has occurred, correcting the control device (remote controller, etc.) input engages this mode.
Probable cause	Because alarm P16, P22, P26, P29, Hx1, Hx2, or H31 has occurred, check the alarm history then refer to the corresponding items.
Correction	Follow the instructions in the corresponding items to correct the trouble.
Recovery	After repairing the malfunctioning locations, reset the power for the system (all outdoor units). Caution: Automatic backup mode will not be canceled until the power is reset.
Notes	Automatic backup mode is not engaged in cases of alarms other than those listed above. Reasons: • There is no need for automatic backup if recovery is possible by correcting the remote controller input. • With alarms for which automatic recovery is possible (such as sensor alarms), the presence of electrical noise may result in a new alarm. However, it is believed that this occurs for a comparatively short time only. In these cases, a mode (automatic backup mode) that limits operation may be engaged. • Control is not possible when a communications system alarm has occurred. Automatic backup mode is not engaged in order to avoid causing secondary damage.

Blinking inspection display (2) (compressor magnet SW seizing detection)

Alarm code	**(Blinking inspection display)**
Alarm meaning	Compressor magnet SW seizing detected Status: Although an outdoor unit exists where the outdoor unit fan is running, no compressors in the system are operating. ☆ Because the fan is running only at the outdoor unit where seizing was detected, check the corresponding outdoor unit. * The fan may also run on its own when fan cracking prevention control is in effect or when snowfall sensor input is present. Therefore monitor for approximately 10 minutes if the outdoor unit fans are operating at multiple units.
Alarm conditions	Current is detected in the CT circuit when the compressor is stopped. (1) This control is not engaged for the first 30 seconds after the compressor turns ON →OFF. (2) For 1 minute following the first 30 seconds after the compressor turned ON →OFF, the threshold for the detected current is 10 A or more continuing for 2 seconds. (3) All times other than the above: • If the low-pressure SW has not activated, the threshold for the detected current is 7A or more continuing for 5 seconds. • If the low-pressure switch has activated, the threshold for the detected current is 7A or more continuing for 2 seconds.
Probable cause	(1) Magnet SW malfunction • The magnet SW has seized, and the compressor is continuing to run. →Even when the power is turned OFF, the primary side and secondary side contacts remain together. • The conditions of magnet SW operation are poor (difficult to open). →When a magnet SW is used in a DC circuit, it may be difficult for the SW to open at times. In an AC circuit the magnet SW should open instantaneously as long as the current is within the allowable range. However, this kind of trouble can occur if excessive current flows, and may prevent the SW from opening. (2) CT circuit failure or PCB failure (A/D failure) • CT circuit contact failure →Check that the connector is not partially disconnected. Wiggle the connector to check the connection.* * These symptoms will not occur if the connector is completely disconnected or the wire is cut. In these cases alarm Hx3 occurs. • Current of 7A or higher was detected although the compressor was stopped, or a higher current was detected at occasional intervals. • The compressor continues to operate at a time when the outdoor unit should be stopped (such as when all indoor units are stopped). →Check whether or not 200 V is output from the PCB to the magnet SW. If the voltage is output, there is a PCB failure. (3) Installation error • CT1 connector is connected to the compressor 2 side • CT1 circuit is connected to the compressor 2 side • CT2 connector is connected to the compressor 1 side • CT2 circuit is connected to the compressor 1 side (4) Electrical noise
Correction	(1) Replace the CT circuit. (2) Replace the magnet SW. (3) Replace the PCB. If the above probable causes are not the cause of the alarm, it is possible that in rare cases the alarm may be caused by the effects of noise. See notes.
Notes	The effects of electrical noise are difficult to identify unless a PC is connected and the conditions are monitored for a long period of time.

6. Inspection of Parts

(1) High-pressure switch (63PH1, 63PH2, 63PH3)

- 63PH1: Disconnect the CN042 connector (3P, WHT) from the outdoor unit control panel. Measure the resistance between socket pins 1 and 3. The resistance is OK if the result is 0 Ω.
- 63PH2: Disconnect the CN044 connector (3P, RED) from the outdoor unit control panel. Measure the resistance between socket pins 1 and 3. The resistance is OK if the result is 0 Ω.
- 63PH3: Disconnect the CN233 connector (3P, YEL) from the outdoor unit control panel. Measure the resistance between socket pins 1 and 3. The resistance is OK if the result is 0 Ω.

(2) Electronic control valve (MOV1, MOV2, MOV3, MOV4)

After removing the connector from the PCB, use the following methods to check the valves.

- MOV1: Measure the voltage between plug pin 5 and pins 1 through 4 at the CN015 connector (6P, WHT) on the outdoor unit control PCB. (Because of the pulse output, a simplified measurement method is used. Set the tester to the 12 V range; if the value displayed is approximately 4 V, then the voltage is normal.)

  When the voltage is normal, measure the resistance between each pair of pins on the electronic control valve connector. The connector is normal if all results (pin 5 – pin 1, pin 5 – pin 3, pin 6 – pin 2, pin 6 – pin 4) are approximately 46Ω. (If the results are 0Ω or ∞, replace the coil.)
- MOV2: Measure the voltage between plug pin 5 and pins 1 through 4 at the CN016 connector (6P, RED) on the outdoor unit control PCB. (Because of the pulse output, a simplified measurement method is used. Set the tester to the 12 V range; if the value displayed is approximately 4 V, then the voltage is normal.)

  When the voltage is normal, measure the resistance between each pair of pins on the electronic control valve connector. The connector is normal if all results (pin 5 – pin 1, pin 5 – pin 3, pin 6 – pin 2, pin 6 – pin 4) are approximately 46Ω. (If the results are 0Ω or ∞, replace the coil.)
- MOV3: Measure the voltage between plug pin 5 and pins 1 through 4 at the CN229 connector (6P, BLK) on the outdoor unit control PCB. (Because of the pulse output, a simplified measurement method is used. Set the tester to the 12 V range; if the value displayed is approximately 4 V, then the voltage is normal.)

  When the voltage is normal, measure the resistance between each pair of pins on the electronic control valve connector. The connector is normal if all results (pin 5 – pin 1, pin 5 – pin 3, pin 6 – pin 2, pin 6 – pin 4) are approximately 46Ω. (If the results are 0Ω or ∞, replace the coil.)
- MOV4: Measure the voltage between plug pin 5 and pins 1 through 4 at the CN230 connector (6P, BLU) on the outdoor unit control PCB. (Because of the pulse output, a simplified measurement method is used. Set the tester to the 12 V range; if the value displayed is approximately 4 V, then the voltage is normal.)

  When the voltage is normal, measure the resistance between each pair of pins on the electronic control valve connector. The connector is normal if all results (pin 5 – pin 1, pin 5 – pin 3, pin 6 – pin 2, pin 6 – pin 4) are approximately 46Ω. (If the results are 0Ω or ∞, replace the coil.)

(3) Crank case heater

- Connect a clamp meter to 1 of the 2 crank case heater wires and measure the current. The current is normal if the result is 0.15 A or higher. (As a guide, the current should be 0.14 A (180 V) – 0.17 A (220 V).)

7. Test Pin

When the test pin on the outdoor unit control PCB is short-circuited, each part can be operated individually.

- After turning OFF the main unit power, short circuit the test pin (CN022, WHT), then turn the power back ON. Output is performed in the sequence shown in the table below, for 0.5 seconds each.

	Output	Operation		Output	Operation
1	Relay RY024	Supercooling valve 1 (SCV1)	11	Relay RY012	Save valve (SAVE)
2	Relay RY025	Supercooling valve 2 (SCV2)	12	Relay RY023	Pressure balance valve 2 (PBV2)
3	Relay RY021	Discharge valve 2 (DCV2)	13	Relay RY003	Crank case 2 (CH2)
4	Relay RY020	Discharge valve 1 (DCV1)	14	Relay RY002	Crank case 1 (CH1)
5	Relay RY005	Bypass valve (BPV)	15	Relay RY019	Supercooling valve 3 (SCV3)
6	Relay RY007	Recovery valve (ORVR)	16	Relay RY026	Discharge valve 3 (DCV3)
7	Relay RY006	Balance valve (BALV)	17	Relay RY027	Pressure balance valve 3 (PBV3)
8	Relay RY022	Pressure balance valve 1 (PBV1)	18	Relay RY004	Crank case 3 (CH3)
9	Relay RY017	Refrigerant balance valve (RBV)			
10	Relay RY016	Refrigerant adjustment valve (RCV)			